VOL. 16 NOTES FROM THE SHOP NO. 93

Woodsmith®

No. 93 June, 1994

Woodsmith®

Editor Donald B. Peschke
Managing Editor Douglas L. Hicks
Assistant Editors James M. Dolan, Philip A. Totten, Jonathan Garbison, Mark A. Williams

Creative Director Ted Kralicek
Art Director Rod Stoakes
Senior Illustrators David Kreyling, Cinda Shambaugh
Illustrators Dirk Ver Steeg, Mark Higdon
Photographer Crayola England
Electronic Graphics Chris Glowacki
Design Director Ken Munkel
Senior Designers Jan Hale Svec, Kent Welsh
Shop Manager Steve Curtis
Shop Asst./Facilities Steve Johnson

Circulation Director Liz Bredeson
Subscription Manager Sandy Baum
Circulation Analyst Rod Cain
Newsstand Sales Kent A. Buckton

PUBLISHING SERVICES

Assoc. Editor: Gordon Gaippe • *Sr. Graphic Artist:* Robert H. Whitmer • *Graphic Artist:* Cheryl L. Cynor

CORPORATE SERVICES

Controller: Robin Hutchinson • *Account:* Laura Thomas • *Bookkeep.:* Julie Greenlee • *Prod. Mgr:* Carol Quijano • *Info. Serv. Mgr.:* Joyce Moore • *Elect. Pub. Coord.:* Douglas M. Lidster ' *Applic. Specialist:* Linda Morrow • *Admin. Assists.:* Cheryl A. Scott, Julia Fish • *Recept.:* Jeanne Johnson • *Build. Maint.:* Ken Griffith

WOODSMITH MAIL ORDER

Marketing Dir.: Robert Murry • *Art Dir.:* Cindy Jackson • *Fulfillment Mgr.:* Valerie Wiese • *Catalog Prod. Mgr.:* Bob Baker • *Pro). Supplies:* Linda Jones • *Tech. Support:* Jeff Janes • *Recept.:* Cynthia Kerman

CUSTOMER SERVICE

Supr.: Jennie Enos • *Cust. Serv. Reps.:* Jennifer Murphy, Joy Krause, Sara Kono, Anna Cox, Kristi Andrews, Lonnie Algreen

SHIPPING DEPARTMENT

Supr.: Jerry Carson • *Fulfillment:* Gloria Sheehan, Donnie McVey, Chuck Carlson, Sylvia Carey

WOODSMITH STORE

Manager: Dave Larson • *Assistant Manager:* Paul Schneider • *Sales Person:* Wendell Stone • *Office Manager:* Vicki Edwards

Woodsmith® (ISSN 0164-4114) is published bimonthly (Feb., Apr., June, Aug., Oct., Dec.) by Woodsmith Corp., 2200 Grand, Des Moines, IA 50312.
Woodsmith® is a registered trademark of Woodsmith Corp. Copyright© 1994 Woodsmith Corporation. All rights reserved.
Subscriptions: Single copy: $3.95. One year subscription (6 issues), $19.95. Two years (12 issues), $35.95. (Canada/Foreign add $5 per year, U.S. funds.)
Second Class Postage Paid at Des Moines, IA and at additional offices.
Postmaster: Send change of address to *Woodsmith*, Box 10718, Des Moines, IA 50350.
Subscription Questions? Call 1-800-333-5075, 8:00 am to 5:00 pm, Central Time, weekdays.

EDITOR'S COLUMN

Sawdust

One of the most satisfying things I hear from readers is that they like the proportions and design of the projects in *Woodsmith*. They're projects that would fit comfortably in or around their homes.

All of our project designs start out on paper. But we've learned if we take the time to build a quick prototype, we can work out some of the design questions and details *before* building the actual project.

The prototypes we build may be full size, half size, or even quarter size. Sometimes we build a prototype out of cardboard or Styrofoam. Sometimes if s built from plywood, scrap, or dimension (construction) lumber such as 2x4's.

What we're always looking for in a prototype is what's difficult to see on paper: Do all of the parts of the project "work" together to create a balanced look? Are the proportions right? And, in the case of a chair, is it comfortable to sit in?

GARDEN BENCH. The Garden Bench that's shown on the cover of this issue and on page 6 is a good example of the benefits of building a prototype.

I built a prototype of the Bench using low-grade "two-by" dimension lumber, see the photo above. I didn't worry about cutting out the knots and cracks, or sanding off those ugly lumber grading stamps.

Instead of cutting all the mortise and tenon joints that we planned on using in the finished bench, I screwed it together with drywall screws. (It was plenty strong enough to sit in.) And I didn't rout, sand, or finish any of the parts. (Remember, the purpose wasn't to build a finished bench. It was just a prototype.)

I spent $30 for the lumber and screws and had the prototype done in an afternoon. Was it worth it? You bet

Here's what we learned: First of all, to our eyes the overall size of the bench was just about right (That was a little surprising, since the size is one of the first things we often change after seeing a prototype.)

But when I sat in it, I noticed a few things that weren't obvious on paper. The armrests were a little high. And their shape didn't support my forearms very well. (In the photo you'll notice a few of the different armrest shapes we tried are lying in front of the prototype.)

Also, take a look at the vertical back slats in the photo. The ones on the left of the center grid are positioned as orginally designed on paper. But when I saw the prototype, I thought there was a little too much space between them. And when I sat down and leaned back, a slat caught me right in the backbone.

The solution was simple: Turn the slats so the wide face was forward (as shown to the right of the grid).

All in all, it was well worth the time and the effort.

WALL STORAGE SYSTEM. I've never been a big fan of pegboard. I think most of my problem is those darn little metal hooks. Whenever I've tried to take a tool off the hook, the hook comes with the tool and falls to the floor (usually in the pile of sawdust behind my bench).

The other problem I have is when I buy a bag of assorted metal pegboard hooks. Of the twenty-five hooks in the bag, there's usually only five or six that have the shapes I need. The rest of them get stuck in a drawer somewhere and never used.

That's why I'm so pleased with the Storage System on page 20. It uses pegboard, but it doesn't use those hooks. Instead we've developed a system that uses inexpensive L-hooks from the hardware store.

I started by building a simple chisel rack. But then I realized that the same system could be used to make shelves and drawers to hold tools, hardware, sandpaper, and all kinds of stuff.

We're showing some specific uses we came up with for our shop, but if you have any others, let us know. We're always looking for new ideas.

Don

A LOOK INSIDE

Contents

FEATURES

Garden Bench 6

Most of this Bench is built with mortise and tenon joints. The lattice grid in the back is one exception. Its strength comes from multiple edge laps.

Protecting with Paint 15

A project that sits outdoors much of the year requires a lot of protection. One of the best ways to protect it is to give the project a coat of water repellent and a couple coats of paint.

Edge Laps 16

Edge laps create a strong, locking grid for latticework, shadowboxes, and drawer dividers. Here are step-by-step instructions on cutting evenly-spaced edge laps.

Wall Storage System 20

A pegboard tool rack is a common fixture in many shops. Our Storage System for pegboard includes drawer units, shelves, sandpaper storage, and tool racks.

Spice Drawer 26

Like a "space-saver" appliance, this Drawer hangs beneath your kitchen cupboards. When opened, it swings down so the spices inside are easy to see and within reach.

Spline Groove Jig 30

Splines are a great way to align and strengthen beveled miter joints. Here's a jig that works on a router table to rout the grooves for the splines.

DEPARTMENTS

Tips & Techniques 4

Shop Notes 18

Talking Shop 25

Sources 31

Garden Bench *page 6*

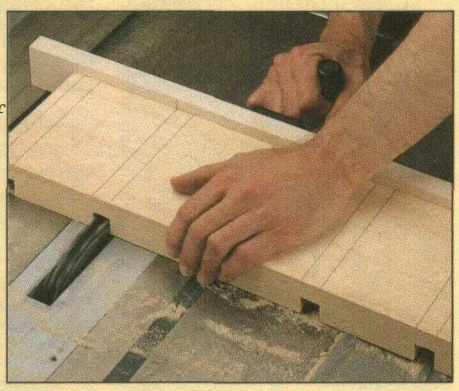

Edge Laps *page 16*

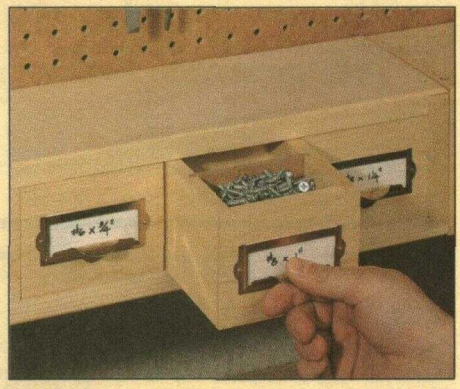

Wall Storage System *page 20*

Spice Drawer *page 26*

Tips & Techniques

UP-IN-THE-AIR EXTENSION CORD

• Like many woodworkers, I do most of my woodworking in a garage. Unfortunately my garage isn't wired with enough electrical outlets.

To avoid tripping over extension cords, or rewiring my garage, I made ceiling-suspended extension cord tracks, see Fig 1.

Each track consists of a cable that's stretched between two screw eyes, see Fig. la. The hooks are screwed into my shop walls, up out of the way near the ceiling. And clipped to the extension cord are shower curtain rings that travel along the cable, see Fig. 1b.

The track works like a shower curtain. When you need to plug in a tool away from the wall, just slide the extension cord down the track. When you're through, slide it back, see Fig. 2.

I have a track for stationary tools located in the middle of my shop. And a track over my workbench that's nice when I'm using hand-held power tools.

John Cartwright
Johannesburg, South Africa

Editor's Note: Use electrical cable ties to keep the extension cord attached to the shower curtain rings, see Fig. 1b.

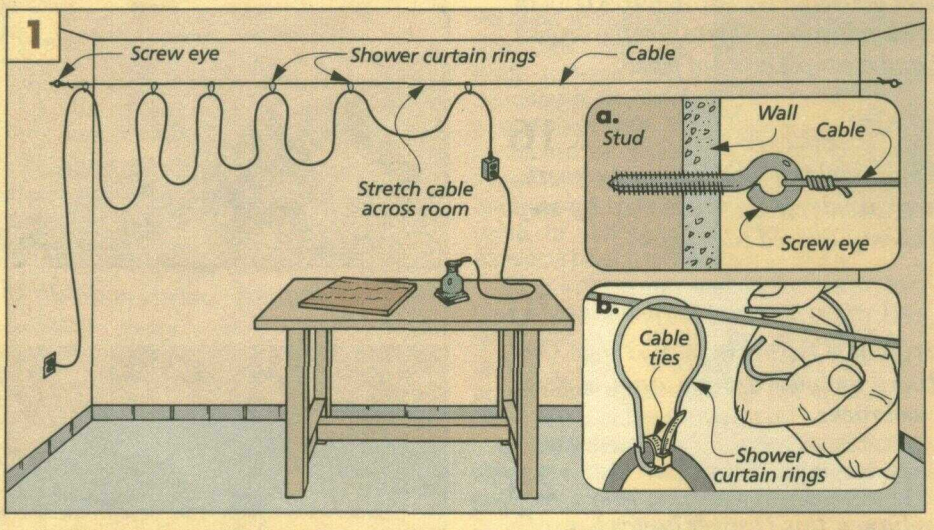

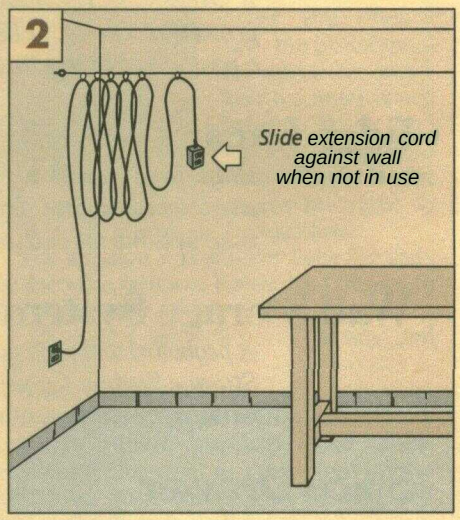

ELECTRIC SQUARING GAUGE

• When setting a table saw blade it can be difficult to tell when the blade is *exactly* 90°. To solve this problem, I made an inexpensive electric gauge, see Fig. 1. The gauge tells the exact moment when the blade is square to the table.

The gauge is built with many of the same parts that you would find in a flashlight (I found them all at a local Radio Shack store for less than $5.)

A lamp holder wired to two brass machine screws and a two-cell battery holder indicates when the blade is square to the gauge, see Fig. 2.

To calibrate the gauge, first place a try square against the screws — with both the gauge and the square on a known flat surface. Then screw them in or out until the lamp lights. (To get better contact, you may want to file the ends of the screws flat.)

Lawrence Gottlieb
Madison, Wisconsin

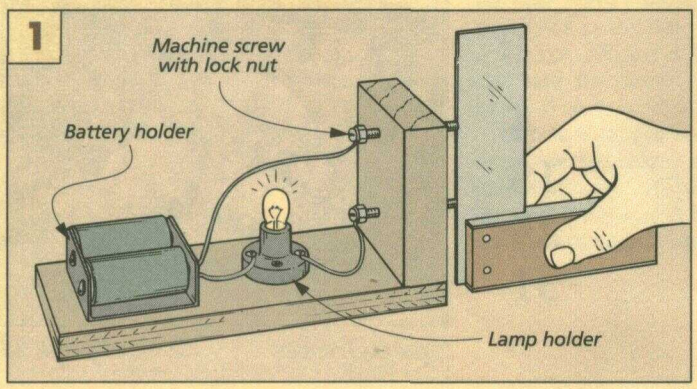

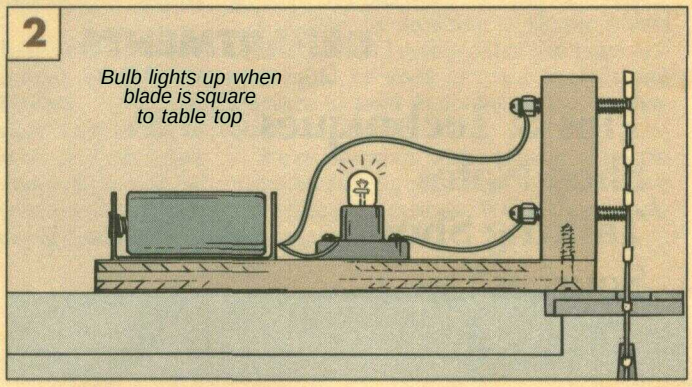

ROUTER TABLE EXTENDERS

• My router table is only designed to handle smaller workpieces. So when routing larger workpieces (like glued-up panels), I temporarily extend the front of the table top with two extension wings, see drawing.

The extension wings are nothing more than two pieces of wood clamped to the sides of the top (clamped flush with the top so the workpiece doesn't catch).

Dave Saunders
Manchester, Connecticut

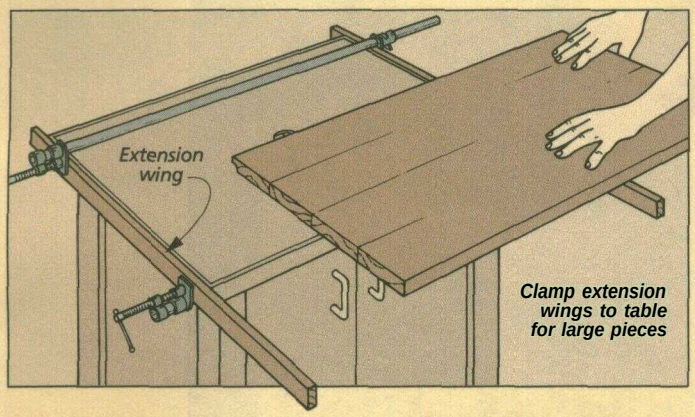

BLADE HOLDER

• The job of changing a band saw blade can sometimes look pretty comical. I'll usually start by placing the blade on the upper wheel of the band saw. Then I'll start to work the blade over the lower wheel. But just when I get the blade in place, it slips off the upper wheel.

So to avoid the Laurel and Hardy routine, I temporarily clamp the blade to the upper wheel before working it over the lower wheel. It doesn't take much to hold it. A couple of spring clamps will do the trick.

Once the blade is on both wheels, set the blade tension. Then remove the clamps before checking the blade tracking.

Jim Engle
Excelsior Springs, Missouri

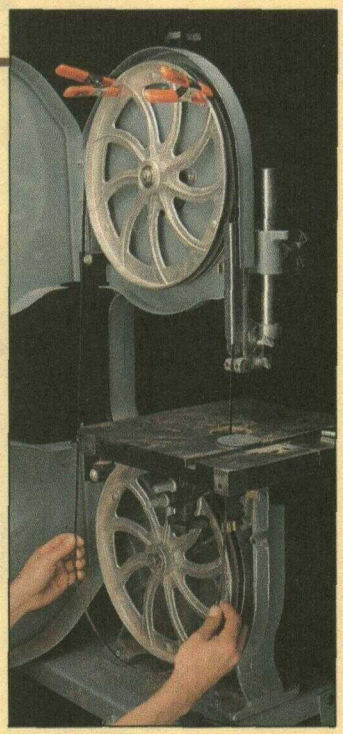

JIG INSTRUCTION STORAGE

• I've built a number of jigs from past issues of *Woodsmith*. Unfortunately, they spend more time hanging on the wall than in use. So when I'm ready to use one, I usually need to refresh my memory on how the jig works.

To avoid digging around for the issue in which the jig appeared, I make a photocopy of the article about the jig. Then I store it in a short length of PVC tubing. And to make it even handier the tube is screwed to the back of the jig, see drawing.

That way, I don't waste time tracking down the information on how it works.

Lynn Canning
Overland Park, Kansas

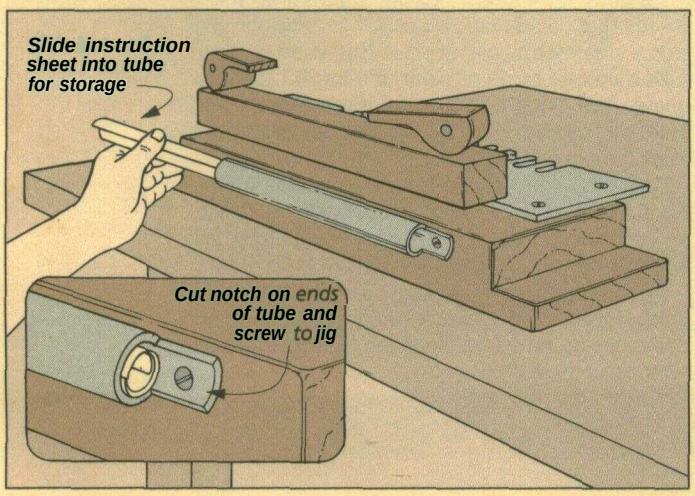

QUICK TIPS

DUST FREE GLASSES

• If you wear glasses (or eye protection), you know how much trouble airborne sawdust can be. It only takes a small amount of sanding or cutting before a thin layer of dust covers the lenses.

To avoid the trouble of having to clean my glasses every time I turn around, I first wipe both sides of the lens with a sheet of fabric softener — the type used in clothes dryers.

The fabric softener leaves a thin film on the lens that helps repel the dust And wiping your lenses removes the static electricity that builds up. It keeps the dust from being attracted to your lenses like a magnet.

Jimmie L. Lambert
Federal Way, Washington

AGED TURNINGS

• I've always admired the ultra-smooth look on posts and bannisters created by generations of hands rubbing across the wood. To duplicate this "aged look" on newly turned projects, I burnish out the wood with a strip of rough leather.

After a few minutes, the wood takes on a look that normally takes years to create.

Rusty Personett
Flagstaff, Arizona

SUBMIT YOUR TIPS

If you would like to share an *original* shop-tested tip, send it to *Woodsmith*, Tips and Techniques, 2200 Grand Avenue, Des Moines, Iowa 50312. Or if it's easier for you, FAX it to us at 515–282–6741.

If we publish it, we will send you $30 to $150, depending on the published length. Include a brief explanation and sketch (or photo). And don't worry, we'll rewrite the tip and redraw the art if necessary. Also, *please* include a daytime phone number.

Garden Bench

Strong joinery is used to build a solid bench out of construction lumber. Vertical slats and a latticework insert give the project a light look. And so does a protective coat of white outdoor paint.

Strong but light. That's the goal I had for the design of this Garden Bench. For strength, I used mortise and tenon joints throughout. But what about the "light" part? Here, there were some decisions to make.

LIGHTWEIGHT. I actually had two things in mind when I was thinking of a light Garden Bench. First, I wanted it to be light in weight so it would be easy to move around when mowing under the Bench.

LIGHT LOOK. But there was another light I wanted to achieve. That was in the *look* of the Bench. The idea was to make the Bench fit well in a typical yard. It shouldn't look like a kid's jungle gym or the living room sofa.

LIGHT SOLUTIONS. My solution to both these concerns was in the design. For the light weight, I used a softwood, Douglas Fir, see the box on the facing page.

Fir may dent a little easier than some hardwoods that could also be used in an outdoor project, such as white oak or teak. But when covered with a couple coats of paint, it's more than adequate. And using mortise and tenon joinery and deck screws makes for a strong bench (no matter what type of wood you use).

As for the light look, there were several solutions. First, I used a lattice insert in the center and slats on the back and sides, see photo above. These are not only strong, they also let light pass through.

Finally, the Bench is painted white for a look that's lighter than if it were unpainted hardwood. For more on how I finished the Bench, there's a separate article on page 15.

EXPLODED VIEW

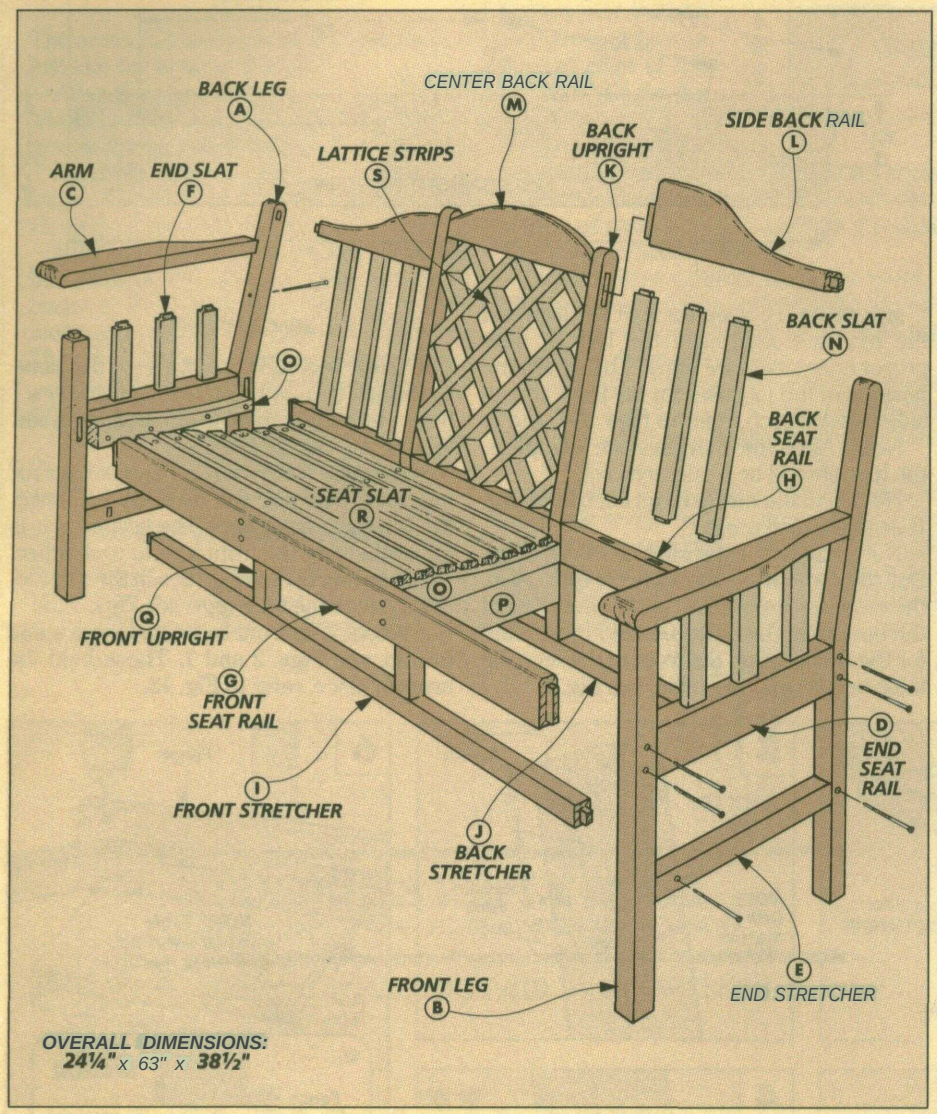

MATERIALS

END ASSEMBLIES

A	Back Legs (2)	1½ x 3½ - 36 (rgh)
B	Front Legs (2)	1½ x ½ - 25
C	Arms (2)	1½ x 3 - 20⅛
D	Seat Rails (2)	1½ x 3 - 17½
E	Stretchers (2)	1½ x 1½ - 17½
F	Slats (6)	¾ x 1½ - 7¾

FRONT & BACK ASSEMBLIES

G	Front Seat Rail (1)	7½ x 3 - 57⅞
H	Back Seat Rail 0)	1½ x 3 - 57⅞
I	Front Stretcher (1)	7½ x 7½ - 57⅞
J	Back Stretcher (1)	7½ x 7½ - 57⅞
K	Back Uprights (2)	1½ x 3½ - 32 (rgh)
L	Side Back Rails (2)	1½ x 5 - 20
M	Center Back Rail (1)	1½ x 5 - 20
N	Back Slats (6)	¾ x 1½ - 15¼

SEAT ASSEMBLY

O	Seat Supports (4)	1½ x ¼ - 15½
P	Support Blocks (2)	1½ x 3 - 12½
Q	Front Uprights (2)	1½ x 1½ - 6
R	Seat Slats (8)	¾ x 1½ - 57

LATTICE ASSEMBLY

S	Lattice Strips (12)	¾ x 1½ - 23¾ (rgh)

HARDWARE

- (30) #8 x 3" Fh Galvanized Deck Screws
- (8) #8 x 2½" Fh Galvanized Deck Screws
- (34) #8 x 1¼" Fh Galv. Deck Screws
- (24) 4d Finish Nails

FINISH

- Water Repellent/Preservative
- Pigmented (Oil-Base) Knot Sealer
- Exterior Oil-Base Primer
- Exterior Latex Paint

CUTTING DIAGRAM

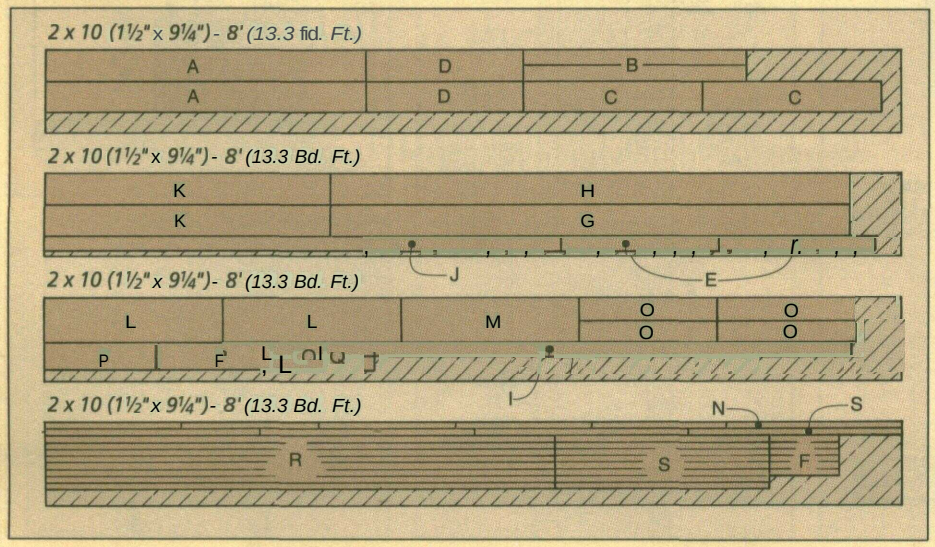

DOUGLAS FIR

Douglas Fir is an excellent wood for many projects. For an outdoor furniture project, such as the Garden Bench, it's especially practical. It's about 30% lighter than white oak, and it costs less too.

But Douglas Fir is not the same product you're likely to find at the home improvement center on the edge of town. Call first and you may learn they have **"whitewood"** or **"SPF"** lumber. This is *not* the same as Douglas Fir. (SPF wood is a mixture of Spruce, Pine, and/or Fir.)

Locally, I found a good selection of Fir dimension lumber (No. 2 and better grade) at the family-owned lumberyard that contractors use downtown.

For more on using dimension lumber, see the article on page 19.

END ASSEMBLIES

To simplify building this Bench, I tried not to think of it as one project. Rather, I concentrated on building sub-assemblies.

I started with the two end assemblies. Each has a straight front leg and a back leg that's angled for more comfort when sitting.

TEMPLATE. Whenever I need uniform parts that have curves or angles, I make a cardboard template first, see Pattern at right.

Design Note: The template for the back legs is also used later for a pair of back uprights. But the legs and uprights are *not* identical. The "BL" marks on the template indicate the top and bottom of the legs. And the "BU" marks indicate the uprights.

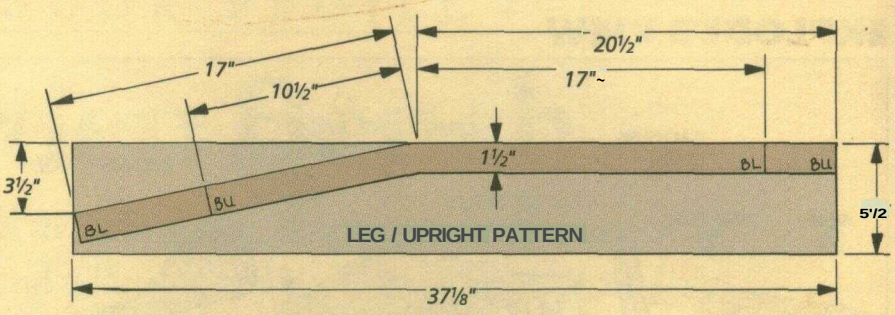

BACK LEGS

I cut all the parts for the Bench from 1½"-thick ("two-by") stock. Because the back legs are angled, I cut them from an extra-wide blank, see Fig. 1.

CUT TO SHAPE. When transferring the pattern to the leg blank, be sure to align the "BL" marks on the template with the edge of the blank, see Fig. 1. Then the back legs (A) can be cut and sanded smooth.

MORTISES. To keep track of the legs and the mortises, first stand the legs in their proper orientation, see Fig. 2. Then mark the position of the mortises on the front and inside faces of each, refer to Figs. 3, 4, and 5.

Note: After the mortises are complete, the legs should be a mirrored set

Now, drill the mortises on each back leg. (I used the drill press.)

Note: I drilled all the mortises 1 1/16" deep. But they're not all the same *length*. Also, the mortises below the "bend" intersect at the bottom of the mortise, see Fig. 6a. And for the mortises on the front of the legs the table needs to be swiveled, see Fig. 6.

FRONT LEGS

The front legs (B) are cut from the same 1½"-thick (two-by) stock as the back legs. I began by cutting them to finished width and length, see Fig. 2.

MORTISES. Each front leg has two pairs of mortises. One pair will be used to connect the front and back legs. The second pair is for connecting the front legs to each other.

These mortises are drilled in the same location as on the back legs, see Figs. 4 and 5.

TENONS. The front legs also have a tenon on top, see Figs. 2 and 7. These hold the arms in place, refer to Fig. 12.

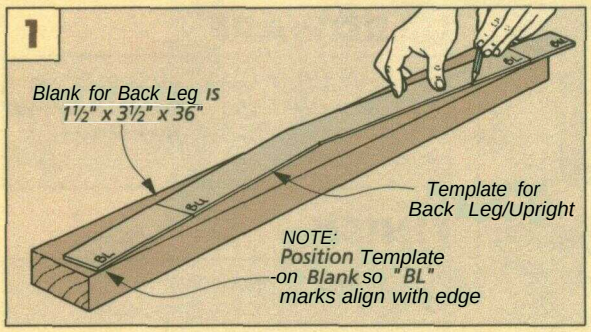

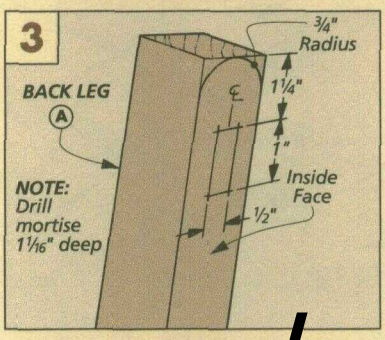

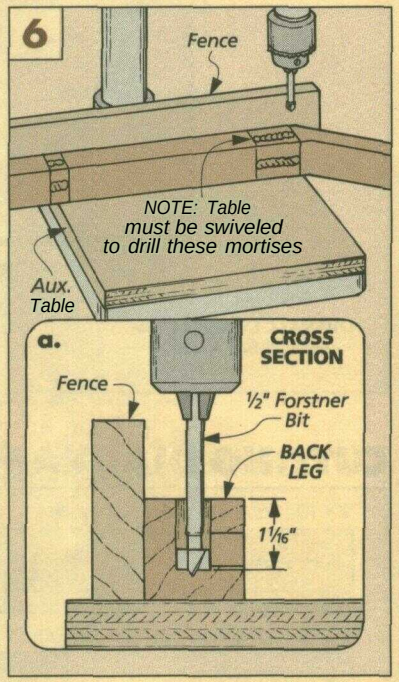

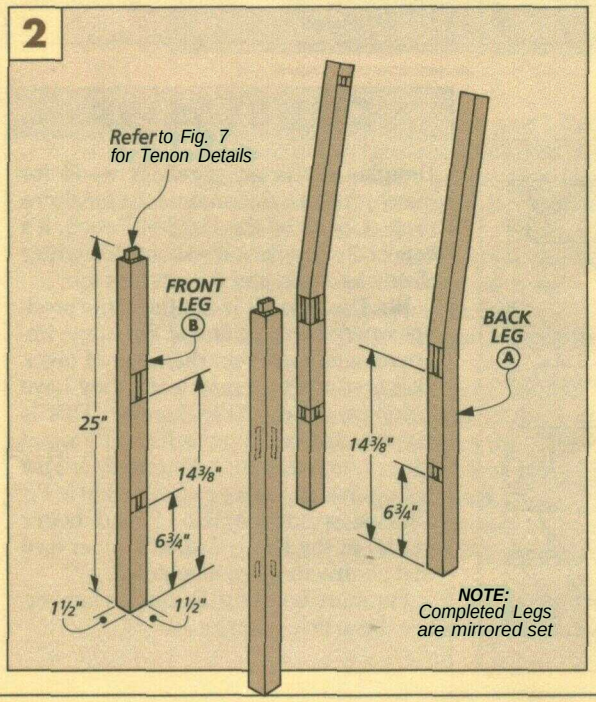

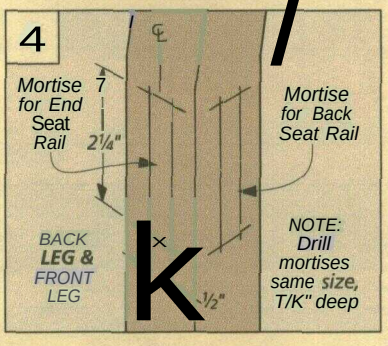

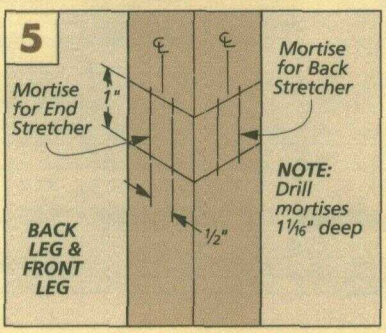

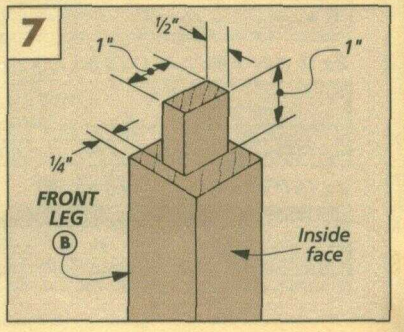

ARMS

The **arms** (C) are cut from 1½"-thick stock just like the legs, see Fig. 8.

After they had been cut to length and width, I laid out a gentle curve along the outside back edge, see the Arm Pattern at right.

MORTISES. Before cutting the arm shape, I laid out and drilled four mortises along the underside, see Fig. 8.

Note: These mortises are not all in line like soldiers. The front mortise is located closer to the inside edge, see. Fig. 8. This mortise fits the tenon on top of the front leg. The others are for arm slats (added later).

CUT TO SHAPE. Next, I bandsawed a radius across the front of the arms, Fig. 8.

Then the curved profile can be cut along the outside edge of the arms. Finally, sand the front edge and profile smooth.

RAILS & STRETCHERS

After cutting the arms to shape, the next thing to do is cut the other two pieces that connect the legs. The **end rails (D)** and **end stretchers (E)** are cut the same length from 1½"-thick stock, see Fig. 9.

MORTISES. Next, I laid out and drilled a series of mortises on the *top* edge of the end rails (D) for the arm slats, see Fig. 9. These are spaced the same as the back three mortises in the arms.

There's also a mortise on the *inside face* of the end stretchers (E), see Figs. 9 and 9a. These are to hold a front rail.

TENONS. Now I moved on to the tenons. These are cut on the ends of the rails and stretchers, see Fig. 9. Cut these to fit the mating mortises on the legs.

BEVEL ARM. Back to the arm for a minute. The last thing is to cut a bevel across the back to fit against the angled part of the back leg, see Fig. 10.

Shop Note: To help determine the location and angle of this bevel (12° in my case), the end rail must be temporarily placed between the front and back leg. To support the arm while marking the bevel, I used a scrap piece as a temporary spacer block, see Fig. 10.

Now cut the bevel across the back of each arm, see Fig. 10a.

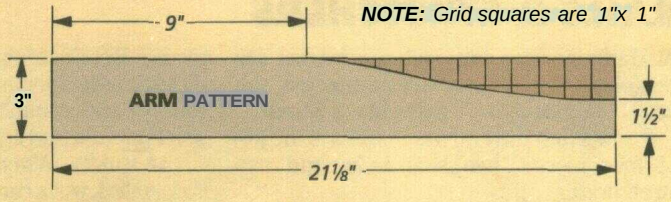

SLATS

The last parts to make for the end assemblies are the ¾"-thick **slats (F)** that fit between the arm and end rail, refer to Fig. 12.

To determine the length of the slats, just add ¾" to the length of the spacer block used for positioning the arm, see Fig. 11. This accounts for the ⅜"-long tenons on the ends.

TENONS. After cutting the slats to length, cut a tenon on each end, see Fig. 11a.

ASSEMBLE ENDS

Finally, each of the end assemblies can be glued and clamped together, see Fig. 12. After the slats have been glued in the mortises, countersink a deck screw through the back leg into the end of the arm, see Fig. 12a.

Now, set aside the end assemblies until the back and front assemblies are complete.

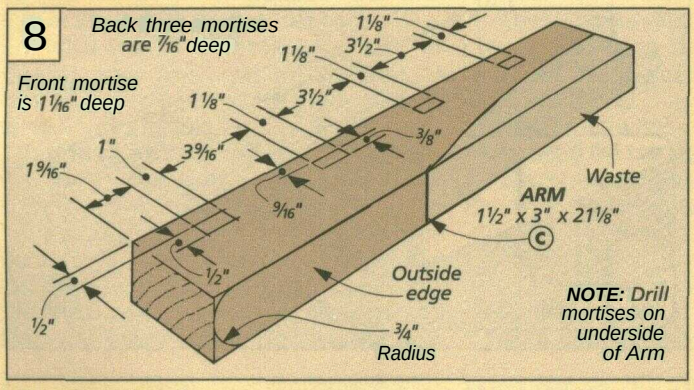

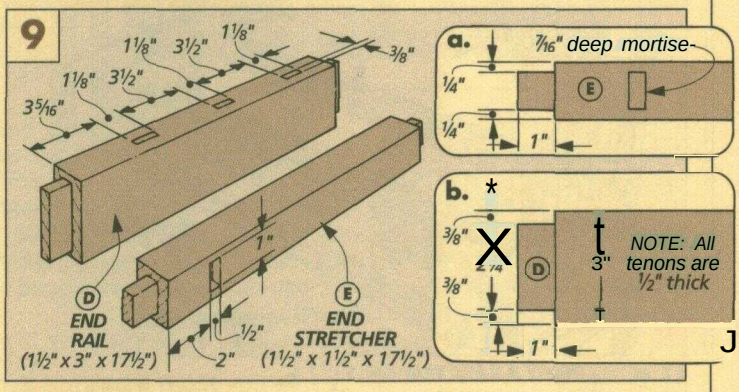

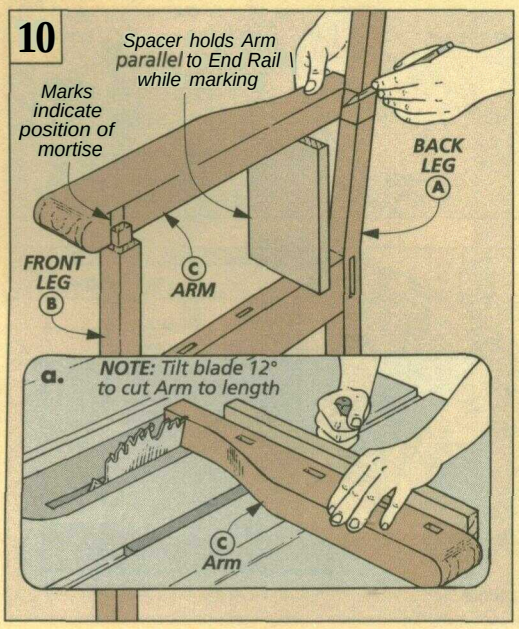

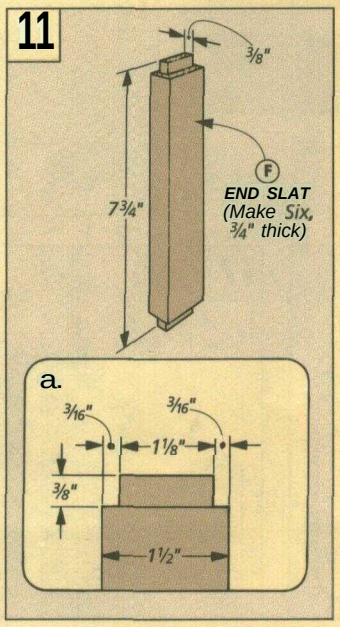

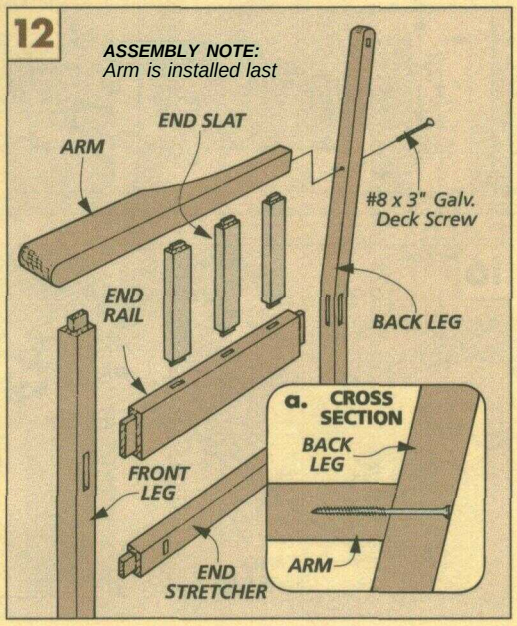

RAILS & STRETCHERS

At this point the two end assemblies are complete. When these are connected, the project begins to look more like a bench.

Connecting the end assemblies is the job of four pieces: two seat rails, and two stretchers.

FRONT & BACK SEAT RAILS. I started by cutting the **front (G)** and **back seat rail (H)** to the same length and width, see Fig. 13. Note: These are cut from 1½"-thick stock, just like the legs.

FRONT & BACK STRETCHERS. Next, the two stretchers that connect the end assemblies below the rails can be cut, see Fig. 13. These parts, the **front (I)** and **back stretcher (J),** start out the same length and thickness as the front and back rails, see Fig 13. But they're narrower (1½") because they don't support as much weight

TENONS. Now tenons can be cut on the ends of all four pieces.

Design Note: The tenons are the same length (7/16") and thickness (½") on all four pieces. But the tenons on the pieces fit into different-size mortises — the tenons on the rails are wider than those on the stretchers, see Figs. 13a and 13b.

LAP JOINTS. When the tenons have been completed, work can begin on the rest of the joints needed on the back rail and stretcher. Theses joints are simply notches that are cut to accept the two back uprights, refer to Fig. 23 on the facing page.

Note: The notches are cut on the *front* face of the back rail (H) and on the *back* face of the stretcher (J). To cut the notches, I used a dado blade in the table saw, see Fig. 14.

Another Note: There's something a little different about the notches on the back rail. The notches on the front also extend across the *top* edge, see Fig. 14a. And there's a good reason for this.

When the back slats are added later, they will be installed at an angle to match the angle in the back uprights, refer to Fig. 23. By cutting a notch in the upper edge of the back seat rail now, a notch in the back upright will fit the notch in the seat rail perfectly.

BEVEL. After all the notches have been cut, the next thing to do is rip a bevel on the back rail. This is to allow the back slats to lean at the same angle as the back legs.

Rip the bevel at a 12° angle along the top edge of the back rail, see Fig. 15.

ANGLED MORTISES. Speaking of the back slats — they fit in mortises along the top (beveled) edge of the back rail, refer to Fig. 23. By drilling these mortises at an angle (see Fig. 17) the tenons on the back slats don't have to be angled. (Cutting tenons at an angle can be tricky.)

Shop Note: The easiest way to drill the angled mortises on the drill press is to support the workpiece with a beveled fence, see Fig. 17. This is simply a piece of scrap that's been beveled to the same (12°) angle as the rail.

Also, an auxiliary table on the drill press helps support the long rail as it's being drilled, see Fig. 17.

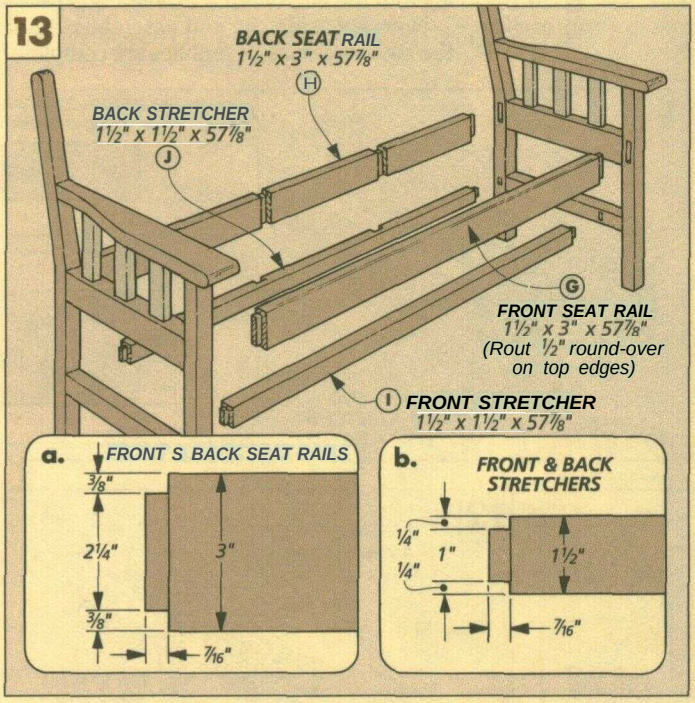

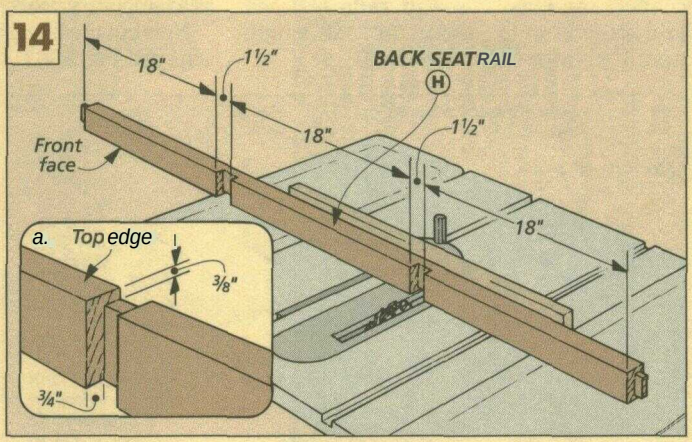

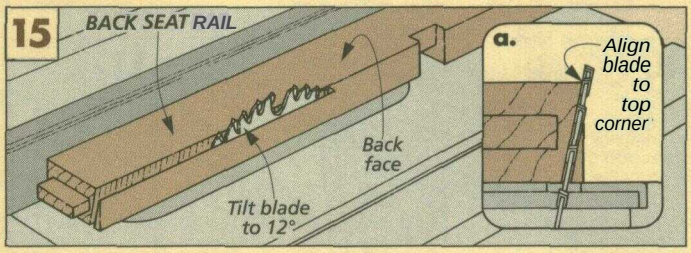

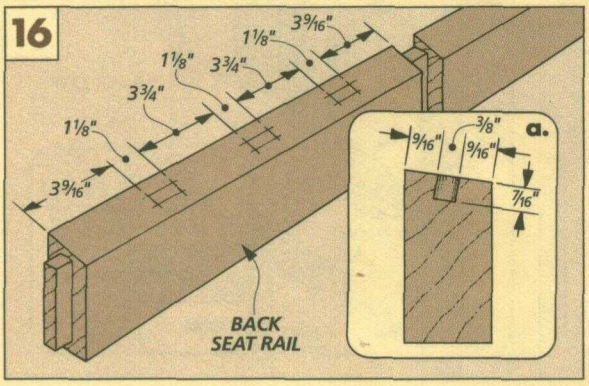

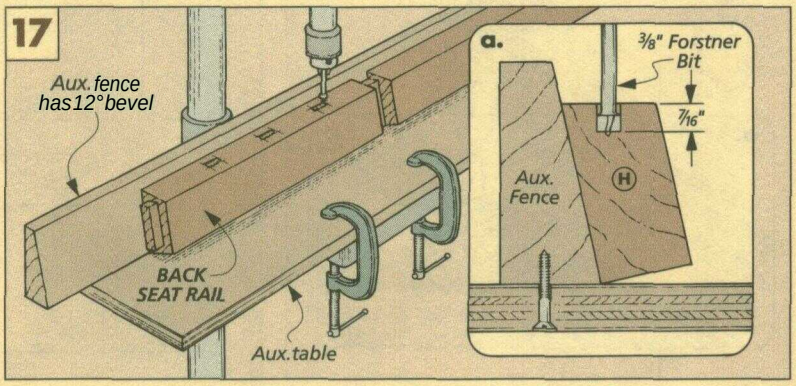

BACK UPRIGHTS

The "backbones" of the Garden Bench are a pair of back uprights angled the same as the back legs (A); they just don't extend all the way to the ground.

CUT TO SHAPE. To lay outthe shape of the back uprights, I again used the Template from page 8, see Fig. 18.

And, just as for the back legs, I used a 3½"-wide blank. Be sure to use the reference points marked "BU" on the template.

HALF LAPS. After the **uprights (K)** have been cut to final shape, I laid out two notches on each, see Fig. 19. (These are to fit the laps on the back stretcher and rail.)

I cut the first notch at the bottom using a dado blade in the table saw. But to cut the notch toward the middle of each upright (on the *back*face), I used the band saw.

MORTISES. Next, lay out and cut two mortises on each upright — a short mortise on the inside face and a longer mortise on the outside face, see Figs. 19 and 20. Just locate and drill these to produce a mirrored set

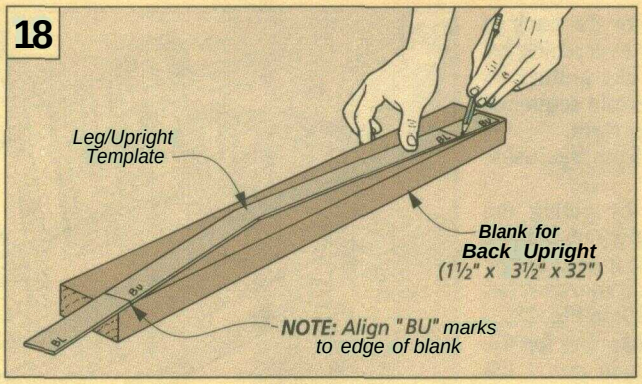

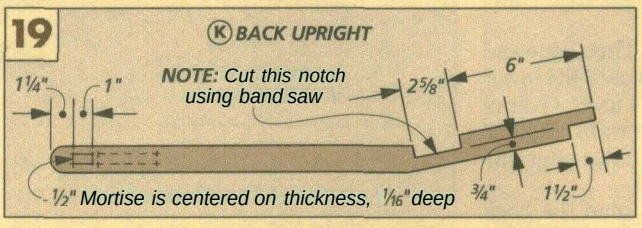

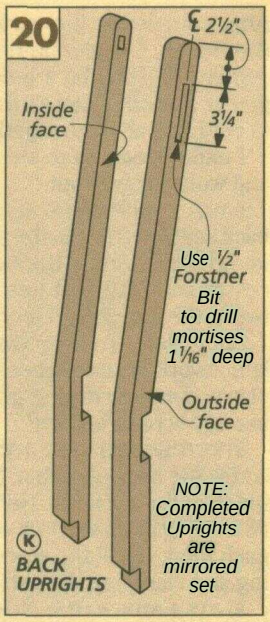

BACK RAILS & SLATS

To connect the back uprights to the back legs at the top, there are three back rails.

BACK RAILS. The back rails also give the Bench a graceful appearance (because the tops are curved). Start cutting the rails from three 5"-wide blanks, see Fig. 21.

TENONS & MORTISES. Before cutting the rails to final shape, I first cut tenons on the ends of each rail, see Fig. 22.

Then, lay out and drill three mortises on the bottom edge of the side rails (L), see Fig. 22. There are *no* mortises on the center rail.

CUT TO SHAPE. Now lay out and cut a profile on the upper edge of the two **side rails (L),** refer to Pattern, right.

Then lay out and cut a gentle arc along the top edge of the **center rail (M),** see Fig. 21.

Next, rout a ½" roundover along the top edges of each piece.

TENON SHOULDERS. Now the tenons on the rails can be cut to final width, see Figs. 23a and 23b. Note: For the side rails, I cut the top shoulders to produce tenons a little (⅜") narrower than the length of the mortises. (See page 18.)

BACK SLATS. Finally, cut six **back slats (N)** to fit between the back rails and seat rails, see Fig. 23. Then cut tenons on each of the slats, see Fig. 23c.

Now the back assembly can be dry assembled. And to keep it square — especially the opening where the lattice will be installed — I cut a square piece of plywood to *exactly* fit this opening, see Fig. 23.

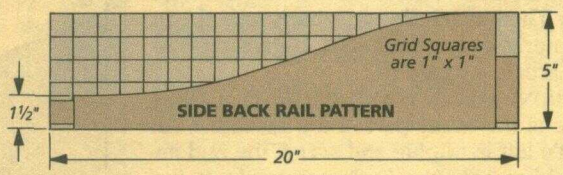

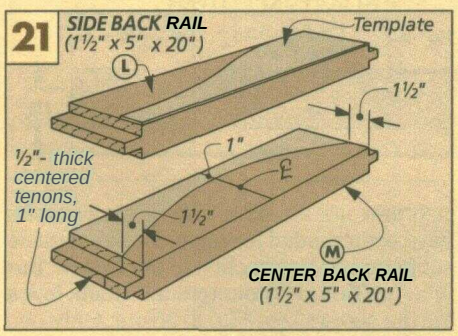

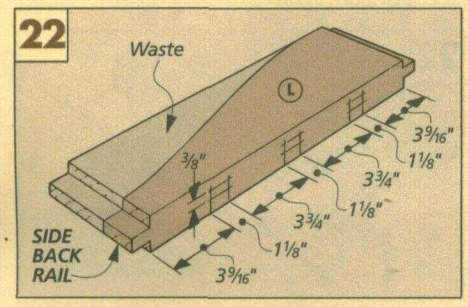

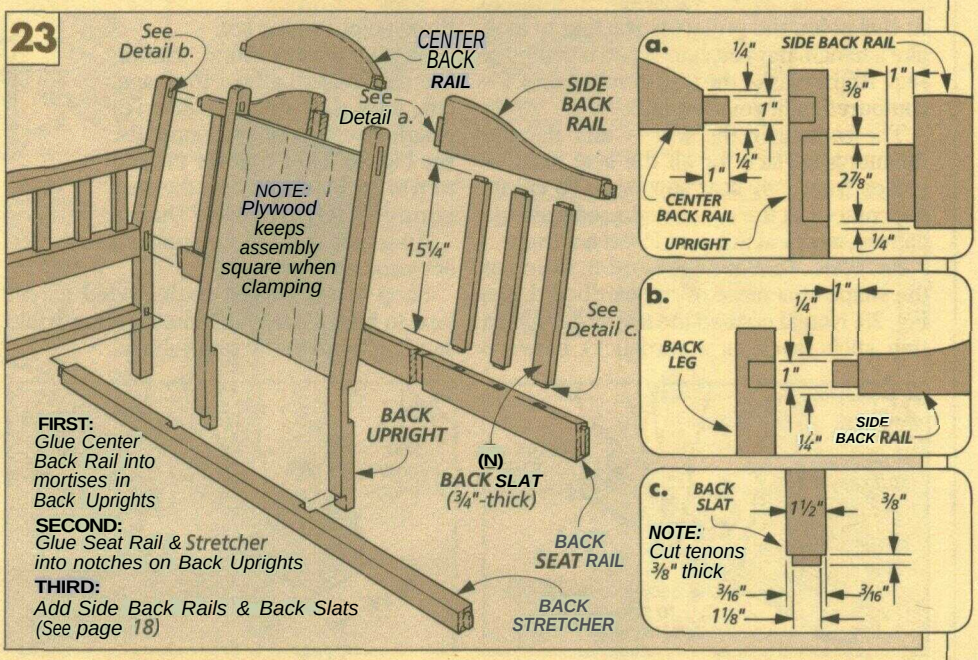

BASE ASSEMBLY

After completing the parts for the back of the Bench, I began putting everything together. This can be a little like putting together a puzzle. There's a certain sequence to getting it all to go together right.

I found it easiest to start from the inside and work my way out.

RAILS TO UPRIGHTS. Start by gluing the back seat rail (H) into the upper notch in the uprights (K). And at the same time, glue the center back rail (M) into the mortises between the uprights, refer back to Fig. 23.

Shop Note: To keep the opening for the latticework square, once again insert the plywood square during glue-up. Also, don't use any screws just yet.

STRETCHER TO UPRIGHTS. Then, glue and screw the back stretcher (J) onto the lower notch in the uprights. Here I used a pair of #8 x 1¼" galvanized deck screws to reinforce each joint. (Drill the screw holes after gluing and clamping the parts.)

SLATS & SIDE RAILS. Next, glue the back slats (N) into the mortises in the back seat rail. Then attach the side back rails (L) to the uprights and back slats. (Again, refer to the article on page 18.)

FRONT PIECES & END UNITS. That takes care of the tricky part of the assembly. All that's left is to glue and screw the end assemblies onto the back unit while at the same time gluing in the front seat rail and stretcher, see Fig. 24.

Note: After the entire assembly has been glued and clamped together, secure all the parts with countersunk galvanized deck screws, see Figs. 24, 24a, and 24b.

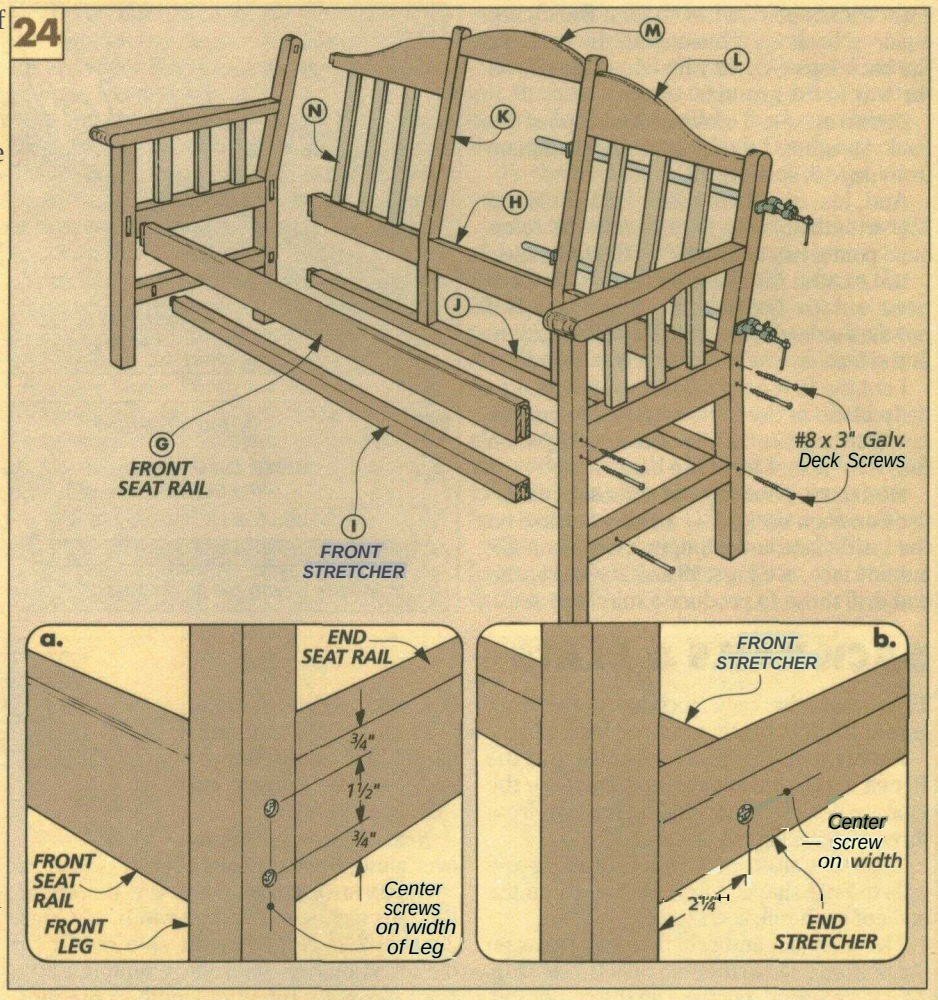

SEAT SUPPORTS

At this point, the project is starting to look like a bench, but you can't sit on it without a seat. And to make the seat comfortable, it's contoured to fit your bottom.

The contour in the seat — and also the mounting surface for all the seat slats — comes from four seat supports. To create the contour in the supports I used a simple pattern, see Seat Support Pattern at right.

PATTERN. To make the pattern, I laid out the shape on a piece of stiff cardboard, see Fig. 25. Note: I created the arc by bending a thin stick (such as a yardstick) between three points on the arc.

SEAT SUPPORTS. After cutting the cardboard pattern to shape, cut four 1½"-thick blanks to rough size for the seat supports, see Fig. 26. Then transfer the pattern to the blanks and cut the seat supports (O) to finished shape.

After that, sand all the supports to the exact same shape.

Shop Note: I used double-sided carpet tape to hold a pair of blanks together while sanding them to the same shape.

SEAT SUPPORT PATTERN

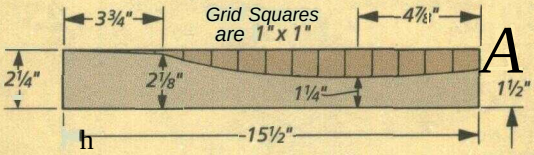

SCREW HOLES. After the seat supports have been sanded to shape, the two outside supports can be attached to the Bench. But first, I drilled four countersunk shank holes for the screws, see Fig. 27. Note: Only *two* of the supports have screw holes.

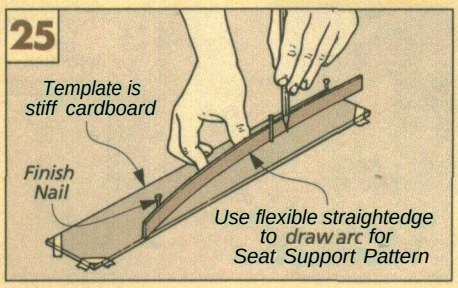

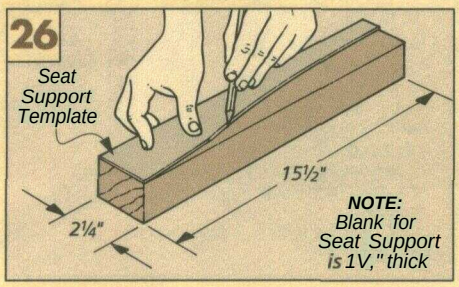

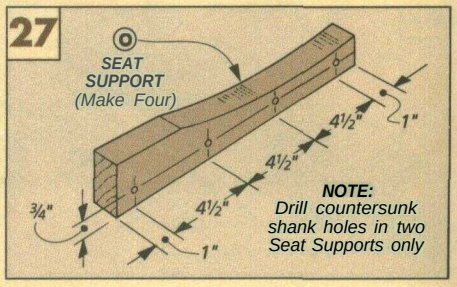

SEAT ASSEMBLY

This is the point in the project when I got an extra burst of motivation — it wouldn't be long until I could actually sit on the Bench.

First, I screwed an outside seat support to each end, see Figs. 28 and 28a.

The center two seat supports are supported from below. That's the job of two support blocks and two front uprights.

BLOCKS. The support blocks (P) stiffen the center supports, refer to Figs. 29 and 30.

After cutting the blocks to finished size, they can be glued to the bottom edge of the seat supports, see Fig. 29. They should be flush with the back end of the supports.

UPRIGHTS. Next, cut two front uprights (Q) to finished size, see Fig. 29. Note: Cut these to length to fit between the bottom edge of the seat support and the top edge of the front stretcher, see Figs. 30 and 31.

Then the supports, support blocks, and uprights can all be screwed in place as a unit, see Figs. 30 and 31.

SEAT SLATS. Now comes the easy (and rewarding) part First, cut a seat blank (another 2x10) to length to fit between the seat rails (D), see Fig. 32.

Then, rip the seat slats (R) one at a time from this blank, see Fig. 32a. Note: Ripping the seat blank determines the *thickness* of the slats. The width of the slats will be the same as the thickness of the blank.

ROUND-OVERS. Next, rout a ¼" round-over on the top edges of each slat. Then, drill four deep countersunk shank holes in each of the slats to align with the seat supports, see Fig. 32a.

Finally, the seat slats can be attached to the bench with galvanized deck screws. Note: The important thing to keep in mind when attaching the slats is that there be an equal (⅜") gap between the slats. And that the second slat extends just to the point on the seat support where the curved profile begins, see Fig. 32b.

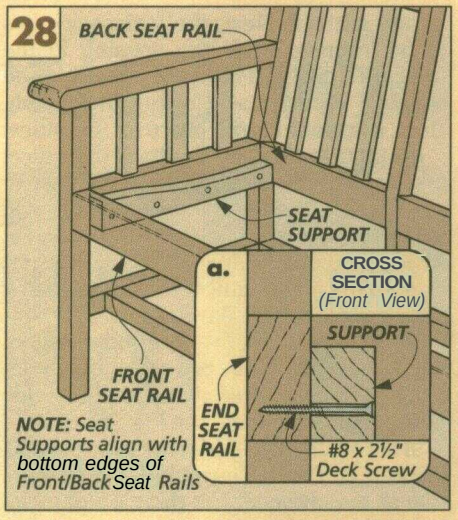

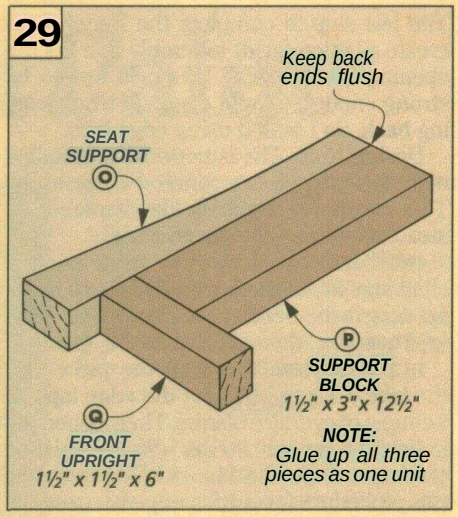

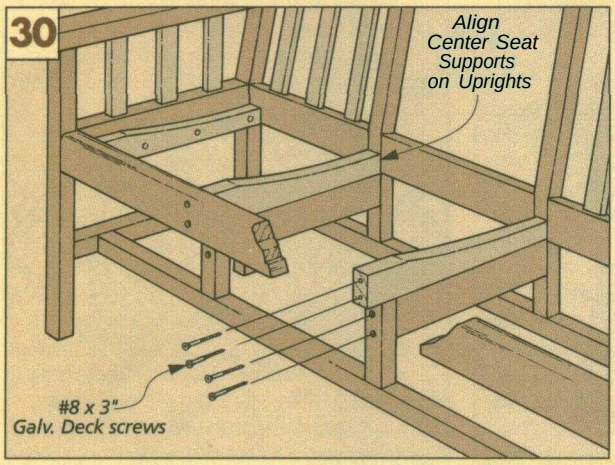

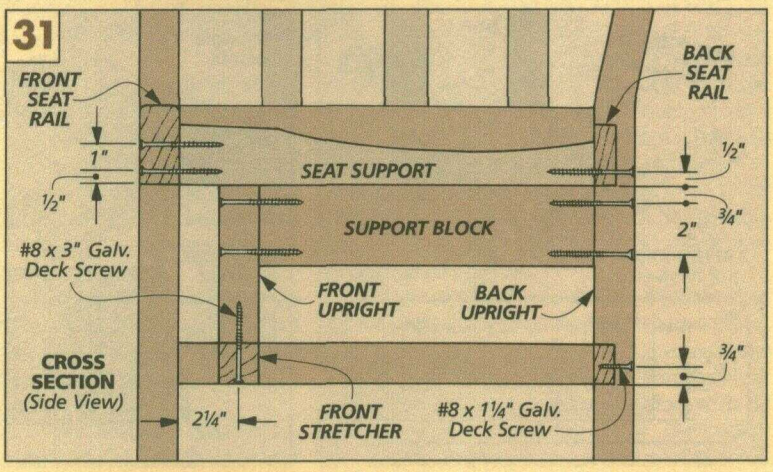

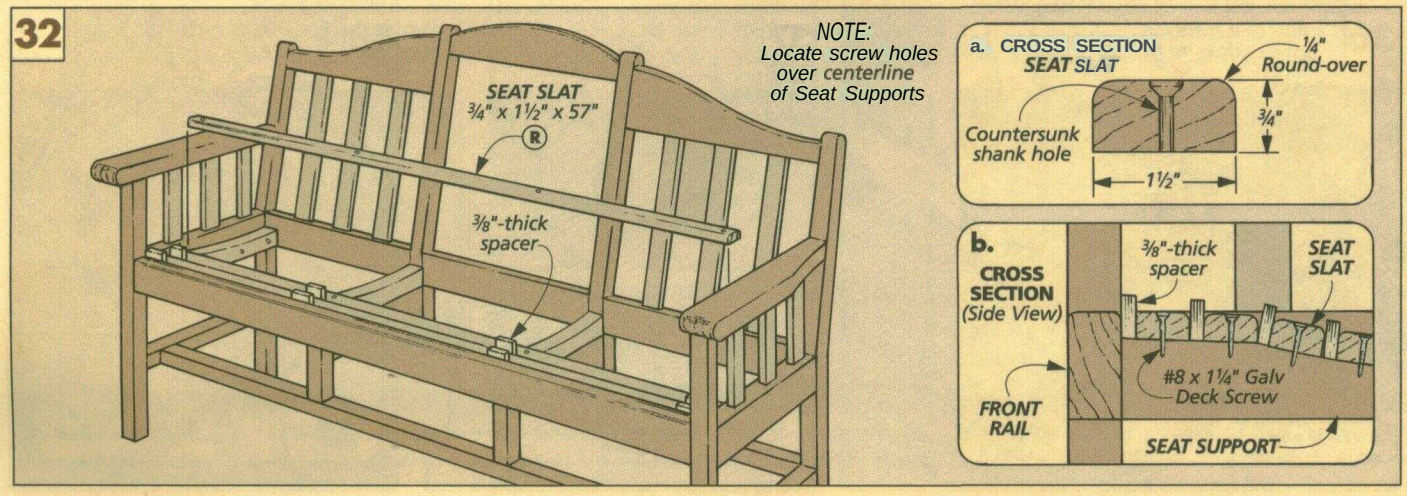

LATTICE INSERT

The last step to complete the Bench is to create a lattice (grid) assembly that fits the opening in the back. This grid has to be strong enough to hold a person when leaning back. So I built it using edge laps.

Design Note: The latticework is installed with the grid pieces running diagonally. This way, the spaces look like diamonds instead of squares, see photo at right.

OVERSIZE GRID. It would have been a challenge to build a diagonal grid so **it fit** the opening in the Bench **perfectly**. So I built the grid **oversize**, then cut it to fit the opening.

BUILD **LATTICE.** To make the pieces for the lattice assembly, I cut the edge laps on a couple of oversize blanks. Then ripped the individual **lattice strips** (S) to finished *thickness* from the blanks. (For more on this procedure for cutting edge laps, see the article beginning on page **16.**)

After the joints have been cut, the lattice can be assembled, see Fig. **33.** Put a drop of glue at the bottom of each notch. Then to make sure it ended up perfectly **flat**, I clamped it to my bench to dry (with waxed paper between the bench and **lattice**).

TRIM LATTICE. Next, the latticework has to be trimmed to fit the opening in the Bench. To do this, I used the same plywood square I used for assembling the Bench. Here, it acts as a carrier board for the lattice.

STABILIZER BLOCKS. To attach the lattice, first draw centerlines across the plywood, see Fig. 34. Position the center opening in the lattice over these lines, see Fig. 35. Then it can be temporarily clamped to the plywood. Note: The lattice should overhang the plywood equally on all sides.

Next, to hold the lattice in this position without clamps, I cut two small triangular blocks. Then screwed them on either side of the center diamond, see Fig. 35.

SPACER BOARD. To trim the lattice to size, I ripped it on the **tablesaw** to the exact same size as the plywood. But there's a problem here. The lattice overhangs the plywood on each side, so you can't run the plywood against the rip fence. To solve this, I added a spacer board between the plywood and the rip fence, see Fig. 36.

Now the lattice can be cut to match the plywood. But there's no need to move the fence. Just rotate the plywood between cuts.

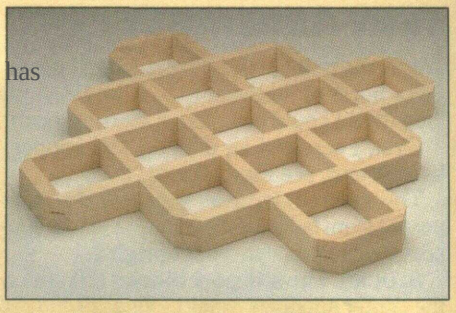

FINISH. With the lattice complete, it can be attached to the back of the Bench. But it's easier to paint it **first**, see next page.

ATTACH LATTICE. To attach the lattice to the Bench, I used two 4d finish nails at each joint, see Fig. 37. (I **"toenailed"** them in so they would hold better.) But first, I drilled holes in the lattice to prevent the nails from splitting the wood, see Fig. 37a.

Shop Note: To get the nails into the tight corners, I used a **needle-nose** pliers to hold the nail while tapping it in, see Fig. 38.

Finally, set the nails and touch up the holes with **spackling** and **paint**, see photo at bottom right on next page. ❑

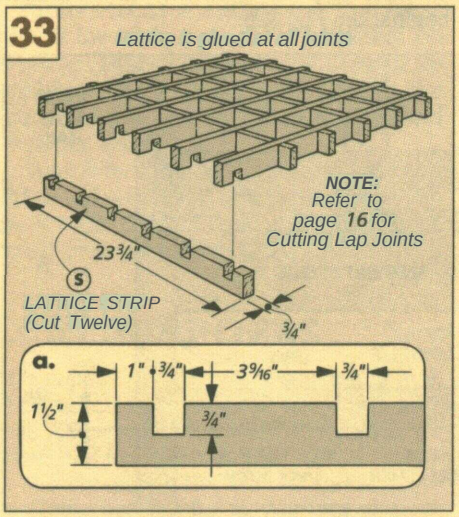

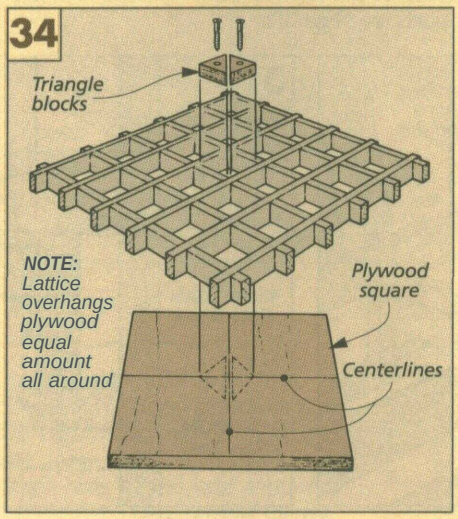

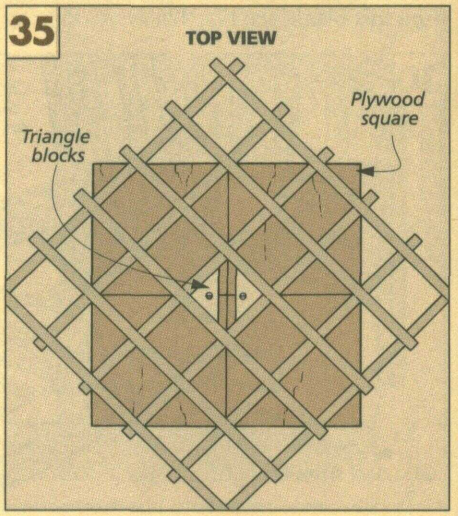

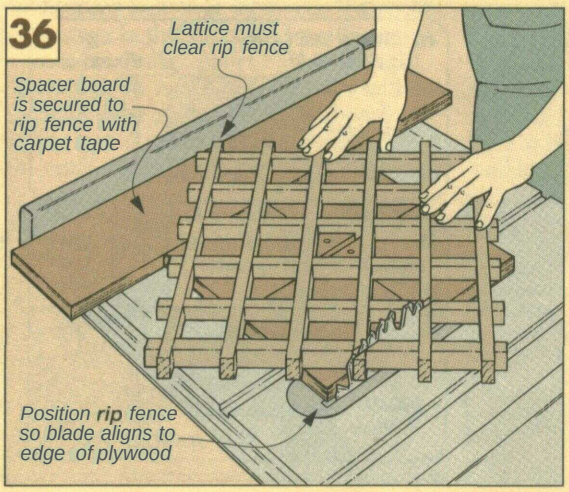

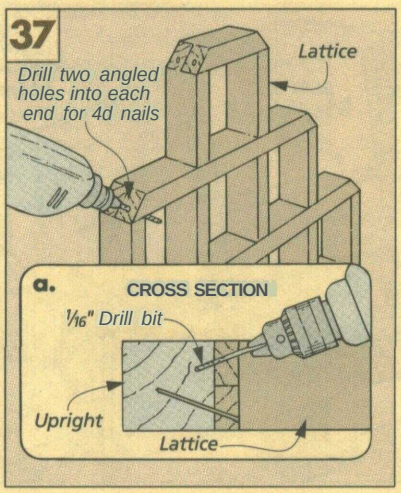

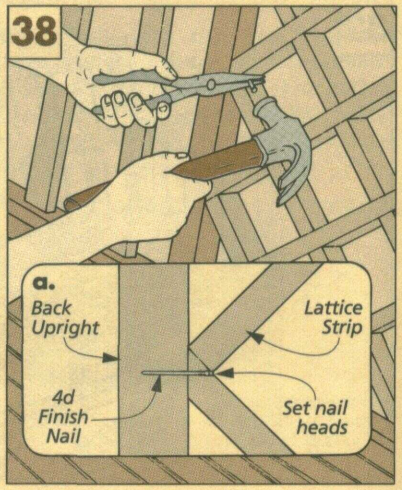

Protecting with Paint

Maybe I'm just getting lazy, but I wanted the Garden Bench to look nice for a long time *without* regular maintenance. That's why I decided to use paint. It was the difference between refinishing every year or two and repainting every ten.

With most projects, I want the wood to look as natural as possible. But a natural, transparent finish just doesn't protect against sunlight

SUNLIGHT. Ultraviolet rays deteriorate wood by breaking down its lignin — nature's "glue" that holds the wood fibers together. A transparent finish lets these rays pass through. Then, as the wood beneath the finish deteriorates, the finish cracks and lets moisture in.

Pretty soon, the project is back in the shop, and you're lounging on aluminum lawn chairs again.

The pigments in paint block ultraviolet rays. And its film is a good barrier against moisture. So paint gives the best protection and lasts much longer.

REPELLENT/PRESERVATIVE

While at the paint store, I remembered hearing that paint will last even longer if you first coat the wood with a water repellent/preservative (such as DAP's Woodlife or General Finishes' Outdoor Oil, for sources see page 31).

OVERKILL. When I asked about this, the salesman said it wasn't necessary. It did sound like overkill.

Just to be sure, I called Bill Feist at the USDA's Forest Products Laboratory. (He's their resident expert on outdoor finishes.)

"Starting off with a water repellent/preservative does offer a distinct advantage," Bill stated. "It's like a safety net. When the paint finally cracks, the repellent slows down the penetration of water into the wood and helps the paint last longer. Just make sure the repellent can be painted when dry."

PREPARATION. I did most of the finishing before the seat slats and the latticework were added. This made it much easier to get at all the nooks and crannies.

To get the Garden Bench ready for its coat of water repellent/preservative, begin by sanding everything up to 120 grit. Then dust it off and set it on a drop cloth in a room with plenty of ventilation.

APPLICATION. I used almost a quart of repellent/preservative on the Bench. I soaked the wood around the joints (where paint usually fails first) and kept brushing the repellent into any end grain until it wouldn't absorb any more. (For end grain on the legs, see left photo below.)

Once the Bench is coaled thoroughly, wipe off the excess. Then, let it sit a couple days to make sure the repellent/preservative is completely dry. (After it dries, seal any knots before painting, see page 19.)

PAINT

Paint is like a lot of other things; you get what you pay for. The expensive paints usually contain more pigments. So they tend to give better protection from light and water.

TYPE OF PAINT. But you still have to choose the type of paint to use. Oil-based and alkyd paints provide better moisture resistance. But they dry harder, so they crack more easily. Latex paints are flexible. They expand and contract with the wood better.

PRIMER & FIRST COAT. On the Garden Bench, I decided to take advantage of the best features of both types of paint First, I brushed on a coat of alkyd primer as a base and then a coat of latex paint. (Note: Latex paints may not adhere to some water repellents. That's another reason to start with an oil or alkyd primer.) I did this on all the parts of the Bench before adding the seat slats and the latticework, see center photo below.

Before adding the seat slats, I painted another coat of latex on the bottom and sides.

SPACKLING. Next, I screwed the seat slats to the Bench and filled the countersunk holes (as well as any other cracks) with interior/exterior spackling. Now, the rest of the Bench is ready for a second coat of paint

The last step is to nail the latticework in place. Then touch up the nail holes using a small brush, see right photo below. ❑

Water Repellent/Preservative. *To seal the end grain in the legs, I let them soak in a water repellent/preservative.*

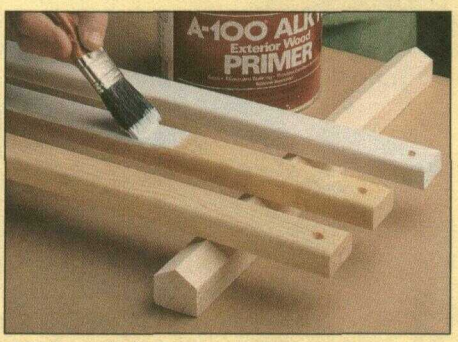

Oil-based Primer. *Before screwing the seat slats to the Bench, they are first primed with an oil-based or alkyd primer.*

Exterior Latex Paint. *After the latticework is nailed in place, I touched up the holes with spackling and exterior latex paint.*

Edge Laps

Most garden-variety latticework isn't very strong. It'll hold climbing plants, but not much else. For the Garden Bench on page 6, I wanted a grid strong enough to lean back on. A perfect place to use edge laps.

What makes an edge lap strong is the way the pieces lock together mechanically. And the more pieces there are, the stronger the grid. Even when making projects with thin stock (like drawer dividers and shadow boxes), edge laps can hold it all together. You almost don't need glue.

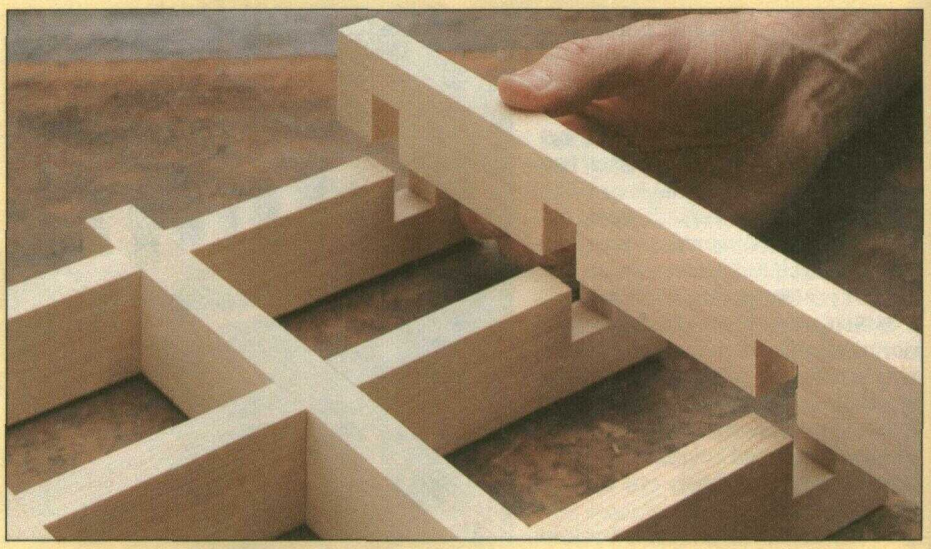

THE BASICS

Edge laps are fairly simple. "Notches" are cut across the edges of two mating workpieces so they slide together, see photo at right When cutting them, there are only a few "basics" to keep in mind.

SAME WIDTH. Since the notches are cut across the edges of each piece, the *width* (height) of all the pieces must be identical.

THICKNESS OF PIECES. Also, if s easier to cut edge laps in a single pass. (I often use a dado blade, see Step 2.) This simplifies the procedure, but it also means the thickness of the workpieces and the width of the blade or dado blade must be identical.

HEIGHT OF BLADE. One more thing. Unlike mortises and tenons or dovetails and pins, edge lap joints have two identical halves. This means the blade must be set exactly half the height of each workpiece, see Steps 3 and 4.

LAYOUT

Like birds on a wire, there can be quite a few edge laps on a single workpiece. The trick is getting the laps spaced evenly. And careful layout is the key.

When laying out multiple edge laps, ifs tempting to use a small ruler and move it methodically to mark the workpiece every so many inches. But this isn't a good idea.

CREEP. What you'll eventually run into is what I call "creep." One time the mark is made on one side of the line on the ruler. Next time if s on the other. And all these little inconsistencies can add up as the ruler is moved along the workpiece.

To prevent this, I use a tape measure, see Step 1. This way, I'm always measuring from one consistent point — the end of the workpiece. Of course, this method requires a little math. But it keeps me from being off just a hair each time. "Just a hair" can add up.

Mark both edges of each notch. Then extend these layout lines across the blank with a square. The reason for this is simple. An

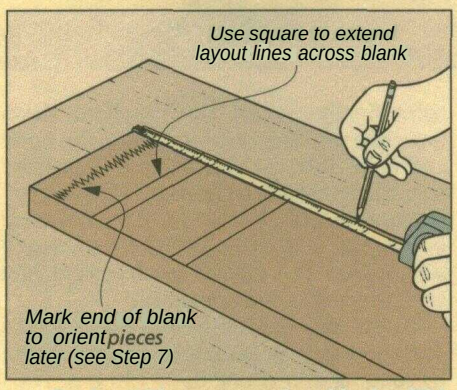

1 *Begin with an oversize blank. (This blank will be ripped into thin individual workpieces later, see Step 6.) Then lay out all the notches at one time.*

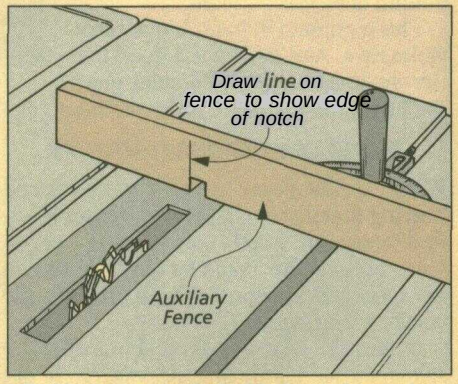

2 *Next mount dado blade and attach an auxiliary fence to the miter gauge. To align layout marks to the blade, cut a notch and draw a line to show edge of notch.*

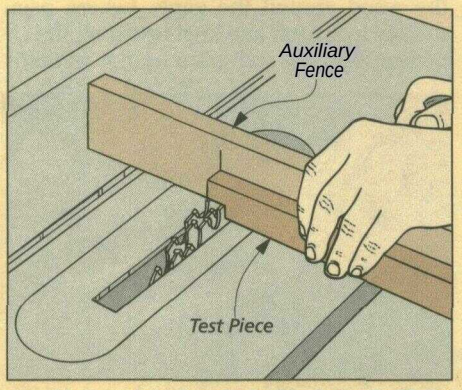

3 *Now, raise the dado blade to half the thickness of the blank and cut a notch on a test piece. The height (width) of this piece must equal the thickness of the blank.*

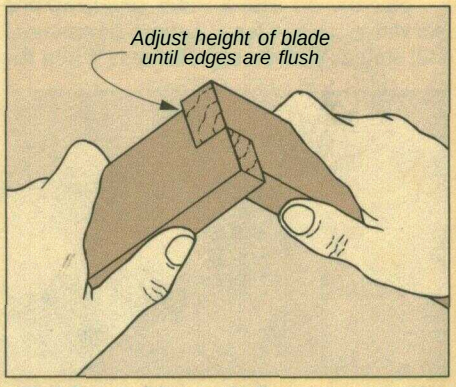

4 *After making a similar cut on another test piece, check the fit of the two pieces. If necessary, adjust the height of the blade until the pieces fit flush.*

auxiliary fence won't support a long blank along its entire length. So the blank will need to be flipped end for end.

INDEXING JIG? Of course, you could avoid the layout by using an indexing jig to cut the edge laps. But a jig isn't foolproof either. It requires time for setup. And the setup has to be perfect, or the results won't be. You're back to the same old "creep" problem.

CUT TO A LINE. When the layout is complete, I cut to the lines. This may sound hit-or-miss. But I've got a way to keep the edge laps on all the workpieces perfectly aligned. (If the edge laps don't line up across the pieces, the grid won't fit together square.)

OVERSIZE BLANK

The trick I use is to start with an oversize blank (or blanks). I cut the edge laps across the *face* of this blank — not the edge, see Step 5. Then I rip the blank into individual workpieces, see Step 6.

This way, I can adjust the thickness of the workpieces to match the width of the dado blade. This may sound backwards, but if s just like fitting a tenon to a mortise.

OTHER BENEFITS. Using a wide blank has other benefits, too. The pieces end up the exact same height All the edge laps are perfectly aligned. And there's no chipout. ❑

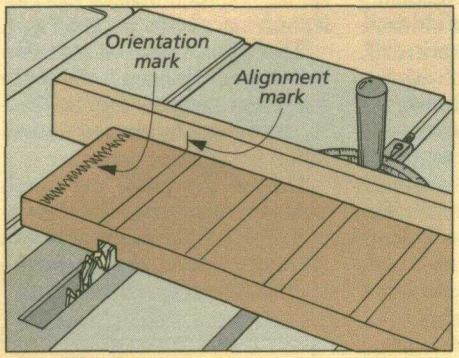

5 *To cut the notches, line up the layout lines on the blank with the mark on the auxiliary fence. Then push the workpiece completely through the blade.*

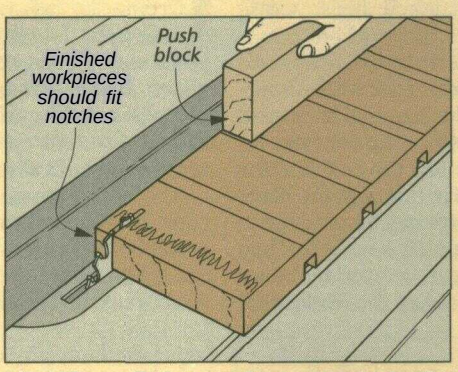

6 *When all the notches are cut, rip blank into finished pieces. (Use a test piece to set the rip fence — the finished pieces must fit the notches snug.)*

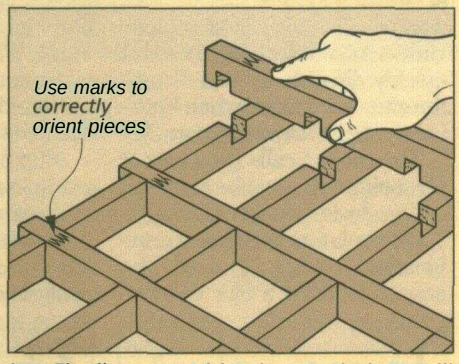

7 *Finally, assemble the workpieces like an egg crate. When the grid is completely assembled, the top and bottom edges of all the pieces should be perfectly flush.*

SPACER BLOCKS FOR EDGE LAPS

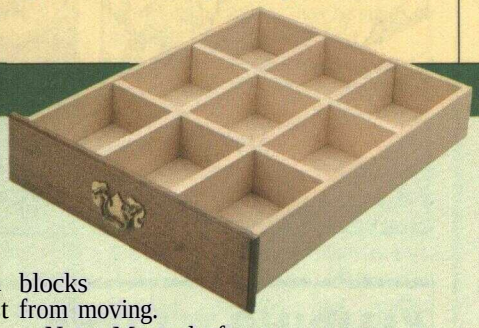

When creating a grid to fit a given opening (like a drawer), I often want the spaces to be exactly the same. One way to do this is with a system of spacer blocks. This lets me avoid some potentially ugly math problems.

With this system there are two sets of blocks, see Fig. 1. One set represents the workpieces in the grid. (I'll call these divider blocks.) Another represents the spaces between the dividers (spacer blocks).

The goal is to get all the blocks to add up to fit the opening for the grid, see Fig. 1.

DIVIDER BLOCKS. I start with the divider blocks. These are cut from a scrap piece that has been planed to the same thickness as the dividers. You need one block for every divider — all with the same thickness.

SPACER BLOCKS. Once the divider blocks are made, the next step is to cut the spacer blocks. Don't worry about cutting these to finished length yet At this point, they should be oversize.

Now, stack the spacer blocks and trim them all to a *consistent* length, shaving just a smidgen off with each pass. Between passes, test to see if the spacers and the divider blocks added together fit the opening.

POSITIVE STOPS. Here's the real payoff. When the blocks fit the opening, I use them as positive stops for the workpiece.

To set up the blocks, I place them all in a line so they're butted to the saw blade at one end, see Fig. 2. At the other end, I clamp a *fixed* stop block to the fence to keep the blocks from moving.

Note: My tool of choice here is the radial arm saw. The table saw will work; it's just a bit awkward.

Cutting the edge laps is simple. To make the first cut, remove a spacer and a divider block and butt the piece against the remaining blocks, see Fig. 3. After cutting the first notch, remove another spacer and divider and make another pass. Note: The piece should never rest against a divider block.

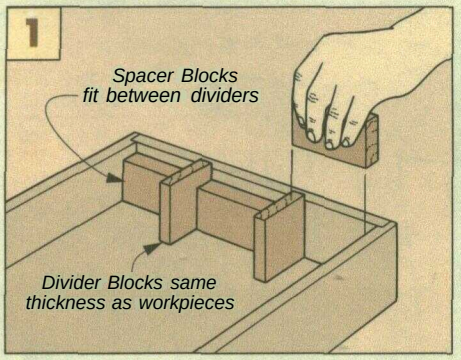

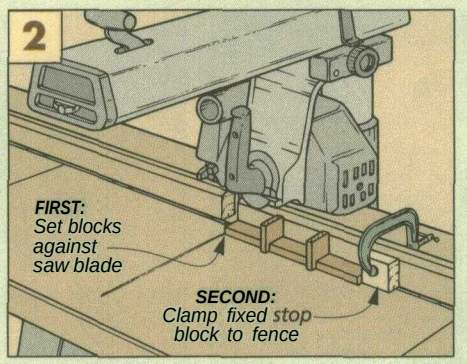

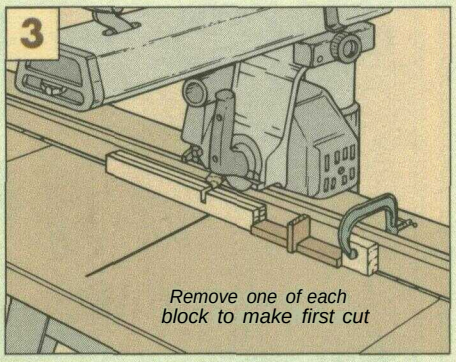

Shop Notes

DRAWING CENTERLINES

• Drawing a centerline across a workpiece isn't usually a problem. Unless the width of the piece isn't quickly divisible by two. That's the situation I faced when building the Spice Drawer (page 26).

The project calls for a pair of pivot pins that must be centered on 2 7/16"-wide drawer sides.

One solution is to use a combination square. I used the square to draw a pair of intersecting diagonal lines across one end of the workpiece, see Fig. 1. Where the two lines meet is the center of the workpiece.

Note: The diagonal lines must start exactly at the corners.

After finding the center of the workpiece in this way, the blade of the square can be adjusted to the centerpoint, see Fig. 2. Then the blade can be used to draw a centerline across the workpiece.

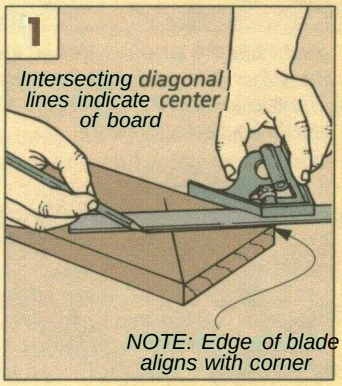

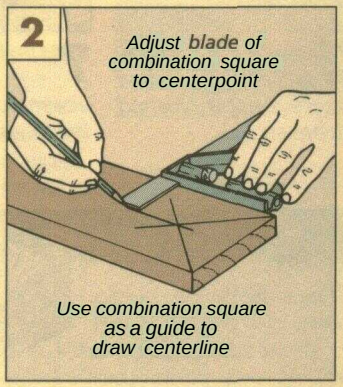

ALIGNMENT JIG

• Ordinarily when installing drawer pulls, I do it the old-fashioned way. Measure, mark, drill, attach. But when faced with lots of pulls and lots of drawers, I take a different approach — I use a shop-built alignment jig.

The Wall Storage System on page 20 is a good example. The project calls for ten small drawers, all the same size, with pulls all attached in the same location. An alignment jig makes this easier and more accurate, see Fig. 1.

The jig consists of just two "L"-shaped pieces of scrap glued together, see Fig. la. (The "L" is created by cutting a small notch out of one corner.)

On the top piece the notch holds one corner of the drawer pull. The bottom piece acts as a cleat to position the jig in the right place on the drawer.

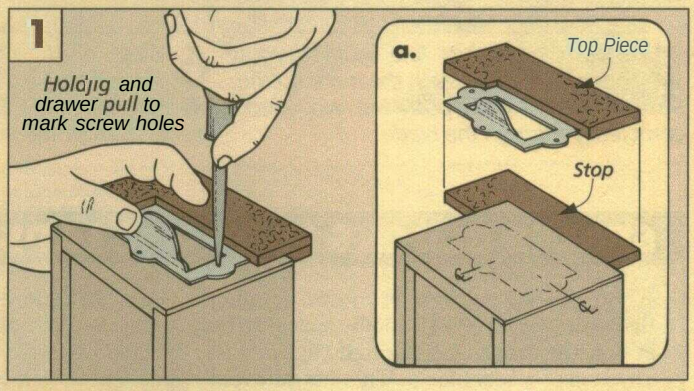

"SLIDING TENON"

• I ran into a unique problem building the Garden Bench on page 6. The back of the Bench has a number of pieces that fit together with mortise and tenon joints. But on this project, the number of tenons on the different parts make the Bench almost impossible to assemble.

The problem is, the tenons on several different parts have to be inserted at the same time. An ordinary tenon that fits tight in a mortise wouldn't work — it gets in the way during assembly.

The best answer would be a "tenon bender," but I've never heard of one that worked. So instead, I cut one of the tenons undersize ("shorter") so it can slide into its mortise, see Fig. 1.

During assembly, the undersize tenon is inserted into the mortise so the top of the tenon fits against the top of the mortise, see Fig. 1.

When the slats have been installed below, the rail is slid down the mortise onto the tenons on the slats, see Fig. 2.

"SLIDING" JOINT. Isn't there a weakness with a sliding joint like this? Not really. There's adequate glue surface between the inside of the mortise and the cheeks of the tenon to make the joint strong.

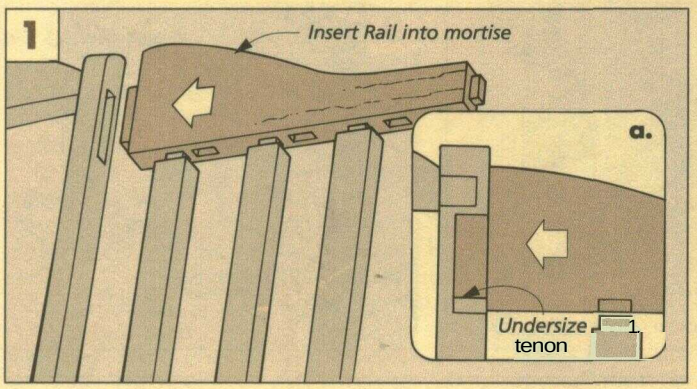

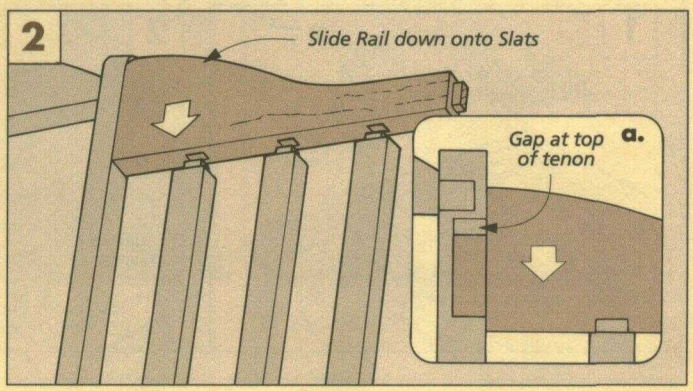

DIMENSION LUMBER

• Dimension lumber ("two-by" stock) is a perfectly good material for outdoor projects. But there are a couple things to look out for when buying and working with dimension lumber.

SELECTING

Most dimension lumber is used for house framing — joists, rafters, and studs. But when you choose dimension lumber for a furniture project, it pays to sort the boards more closely than a building contractor might.

When sorting, I'm looking for the same things I look for in hardwood. Clear boards with few knots and minimal warpage. Ill pick out the best boards I can find and then, as for other furniture projects, buy a couple more than called for in the plans. (To allow for waste when cutting around knots and cracks.)

After getting the wood back to the shop, there's the matter of moisture content Here in Iowa, dimension lumber is dried to a moisture content of about 20%.

This is a higher moisture content than I want when building furniture (12% or less). So what I like to do is to take the time and let the wood dry a bit more before making any cuts.

DRYING

To dry the wood, just stack it in your shop for a week or two, see photo above. If you have a moisture meter, check the moisture content once in a while. If you don't have a meter, give the lumber an extra week to be safe.

As the wood dries, it may also change shape (cup or bow). Or develop checks (cracks) on the surfaces or ends. So I look at the boards carefully as I begin to lay out all the parts.

When laying out the boards, I'm just marking the rough sizes of the pieces listed in the Cutting Diagram. Note: Give yourself some extra width (about ½") and extra length (about 1"). The main thing is to avoid any loose knots or cracks, see Fig. 1.

CUTTING

After laying out all the parts, I begin cutting the boards to rough size. First, crosscut them to make the long boards more manageable. Then the pieces can be ripped (again, to rough dimensions). The important thing is to square up one edge first

At this point the wood may not have perfectly flat and square surfaces. So the first edge may have to be jointed.

Shop Note: Also, if a board is "cupped," place the cupped face down on the table saw to keep it from rocking during the cut.

Finally, because dimension lumber usually has milled (rounded over) edges, I make all the rip cuts with the square edge against the fence. This way, when the piece is ripped to finished width, the last cut leaves both edges of the workpiece square, see photo below.

Direct from the lumberyard, dimension lumber is usually wet. But it won't take long to dry in a home shop. For good air circulation, "sticker" the boards so they're off the ground and not touching.

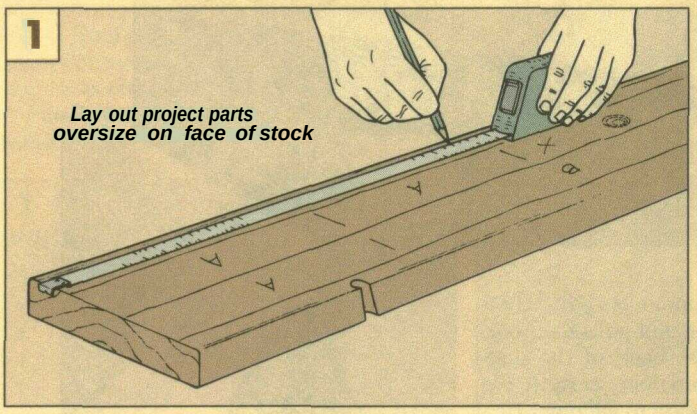

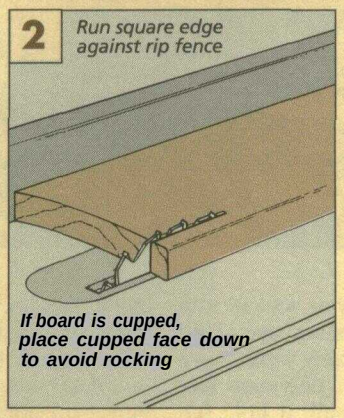

SEALING KNOTS

Knots are common in dimension lumber. But over time, they can interfere with the finish on a project The problem is there's more sap in a knot than in the surrounding wood. And if the knot hasn't been properly sealed, the sap can bleed through the painted finish and create a stain or dark spot.

Before applying a primer coat to a project with knots, the knots must first be sealed. This creates an impermeable barrier over the knot so that sap can't "bleed" through the primer and top coats.

The knot sealer I use is called Kilz, a pigmented oil-based sealer, see page 31.

There's no real trick to sealing a knot. Just coat the knot (both sides) thoroughly with the knot sealer. Then, when the sealer is dry, the entire board can be primed.

Wall Storage System

Here's a pegboard tool rack that uses wall space a lot more efficiently than most pegboards.

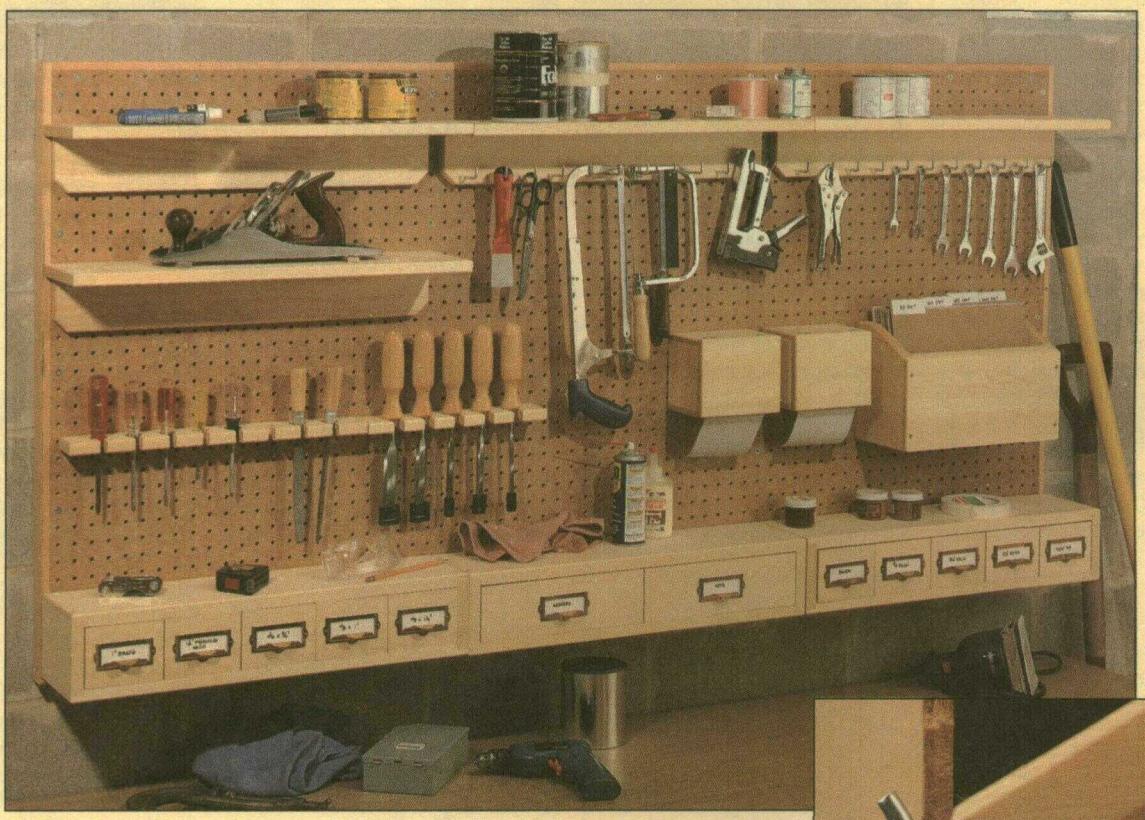

For years when you walked into the *Woodsmith* shop, one of the first things you probably would have noticed was the large pegboard tool rack on the south wall. It held the usual things — screwdrivers, pliers, hammers, and other hand tools.

FALLING HANGERS. One thing that always bothered me about that old rack was the little metal hooks the tools hung from. Almost every time I reached for a tool the hook came off with it or fell to the floor.

To avoid this, we recently designed this Wall Storage System with tool racks and storage units that stay put on pegboard — using simple, common L-hooks.

Here's how the Lrhooks work. First, they're screwed to the back of each storage unit. To hang them, they're tilted in the pegboard at a 45° angle, see top photo at right Then the weight of the unit pulls the hook tight against the back of the pegboard, see bottom photo at right It's impossible for them to fall out

WASTED SPACE. Another thing that bothered me about our old pegboard was the wasted space. It didn't seem to hold as many tools as it should — particularly for its size.

So on our new pegboard, we modified some common tool racks to make them more efficient And added adjustable shelves and drawers to hold items that should be handy, but often aren't Items such as sandpaper, hardware, small containers of finish, or even bottles of glue.

It's a simple design that does a lot more, with a lot less. And it's all done with common materials found at most lumberyards.

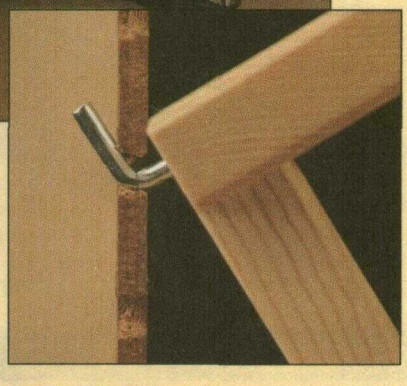

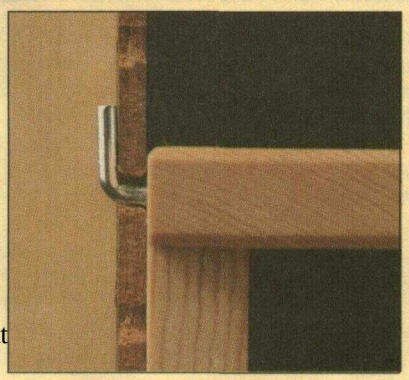

PEGBOARD FRAME

The frame that the **pegboard** hangs on is made from standard **"two-by"** lumber (**1½"** thick). I used a sheet of ¼" pegboard instead of ⅛" pegboard because it **will** hold the weight of the bins and shelves better.

FRAME. Start by cutting the **top (A), bottom (B),** and **sides** (C) to finished size.

Then cut two reinforcing **ribs (D)** to finished width and rough length. Also, rip them to finished thickness(**1¼"**).

RABBET. To join the frame, first cut a **rabbet** on the inside edges of the top **(A)**, bottom (B), and sides (C) to hold the ¼" pegboard. To do this, I used **a** dado blade buried in an auxiliary fence, see Fig. 1.

NOTCH. To join the sides (C) to the top (A) and bottom (B), cut a notch on both ends of each side, see Fig. 2. Cut these notches **just** wide enough to accept the top and bottom pieces.

After the sides (C) are notched, the next step is to cut two dadoes in the top (A) and bottom (B) to hold the ribs **(D)**, see Fig. 4.

ASSEMBLY. Now the frame is ready to be assembled. To do this, first drill and screw the sides to the top and bottom, see Fig. 3. Then cut the ribs to finished length and screw them in place, see Fig. 4.

PEGBOARD. Once the frame is screwed together, cut the pegboard to fit between the rabbets. Design Note: **Cut** the pegboard so the holes are within ½" of the edge, see Fig. 5. That way the **L-hooks** in the storage units won't contact the sides or **ribs.** And the units won't hang over the edge of the **frame.**

Finally, rout an ⅛" chamfer around the outside edge, see Fig. 6.

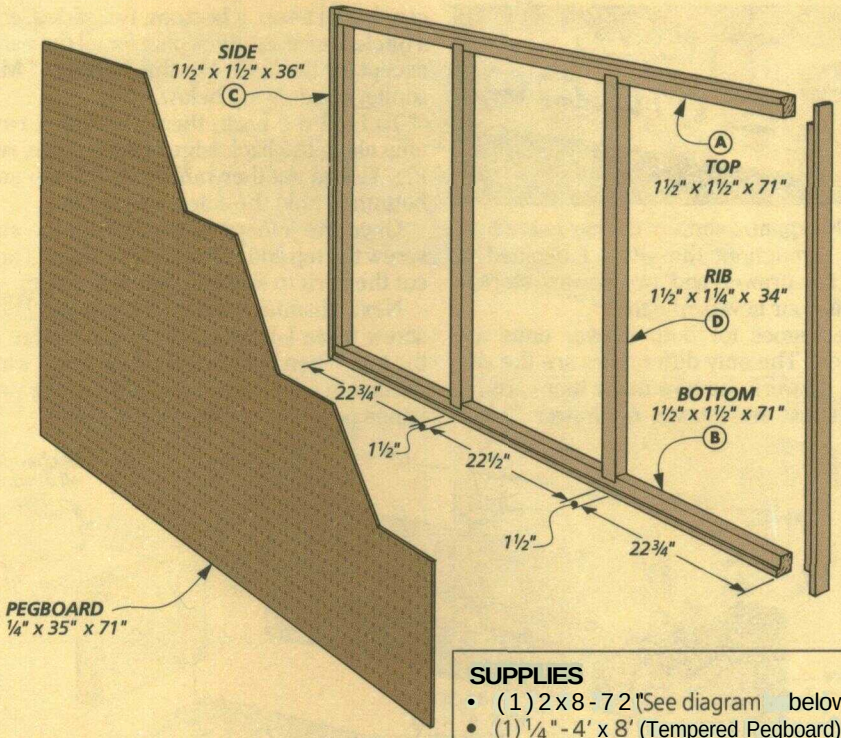

OVERALL
DIMENSIONS:
1½" x 36" x 72"

SUPPLIES

- (1) 2 x 8 - 72" (See diagram below)
- (1) ¼" - 4' x 8' (Tempered Pegboard)
- (16) #8 x 1¾" Flathead woodscrews
- (44) #12 x 1" Flathead woodscrews

CUTTING DIAGRAM
2x8 (1½" x 7¼") - 6' (8 Bd. Ft.)

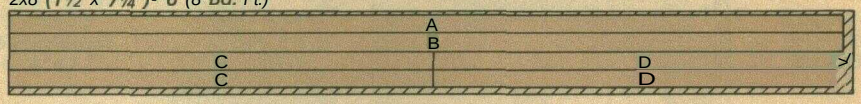

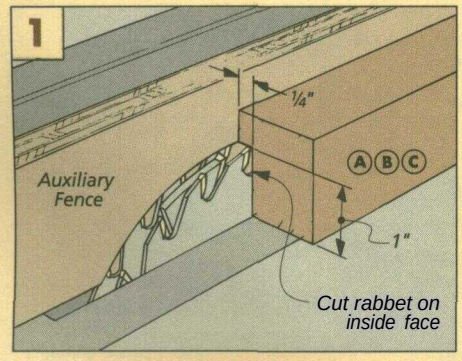

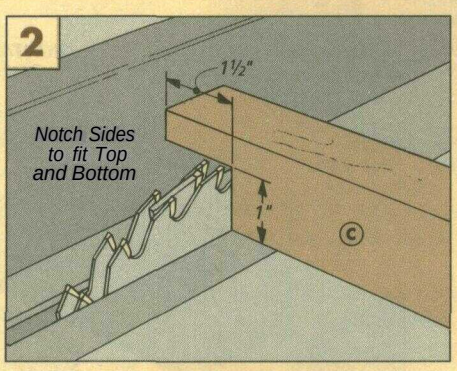

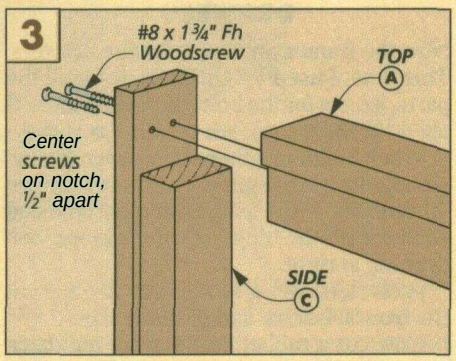

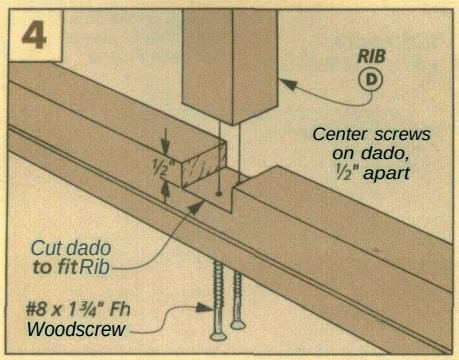

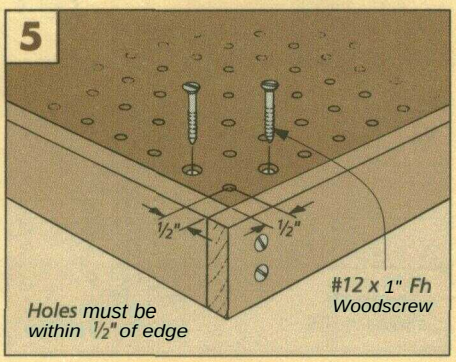

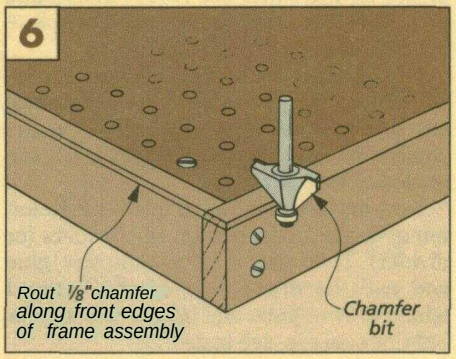

DRAWER FRAME

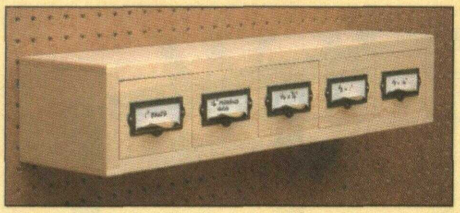

To help organize some of the hardware scattered throughout the shop, I decided to build five-drawer and two-drawer storage units for our new pegboard.

The frames for both drawer units are identical. The only differences are the size of the drawers and how many there are.

BUILDING THE FRAME. A drawer consists of a **top,** a **bottom,** two **sides,** and a **back** I used ¾"-thick pine for all the parts except for the back. For this I used ¼" Masonite, see drawing below.

To hold the back, there's a rabbet running along the back edge of each piece, see Fig. 7. And another rabbet on the top and bottom to hold the sides, see Fig. 8.

Once the joinery is complete, glue and screw the top and bottom to the sides. Then cut the back to size and glue it in place.

Next, chamfer the top and bottom. Then screw three L-hooks into the back edge of the top. When installing the L-hooks, it's important to install them correctly so the unit frames properly, see drawing at right.

L-HOOK

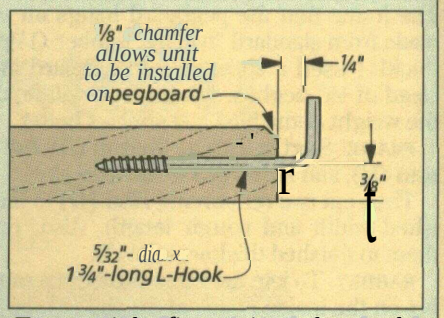

For a tight fit against the pegboard, chamfer the back edge and tighten the L-hooks until approx. ¼" from the back.

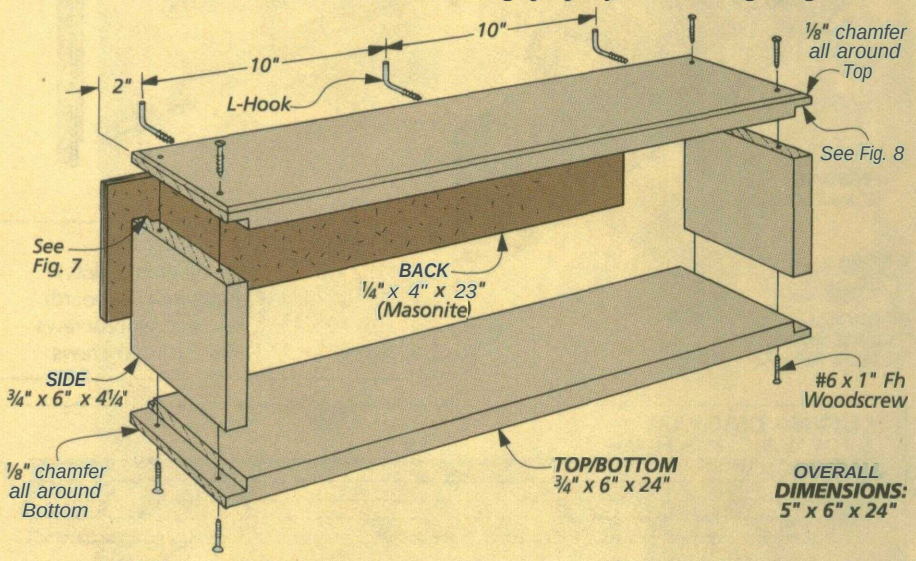

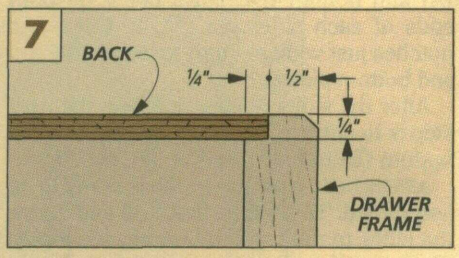

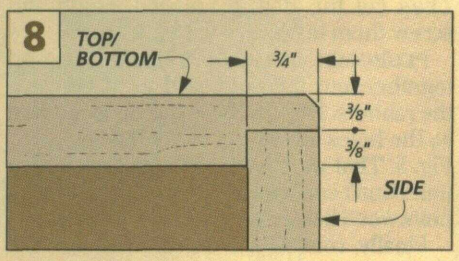

DRAWERS

Now the frames are ready for the drawers. This time, I used ½"-thick stock for all the parts, except for the bottoms and dividers (I used ¼" Masonite), see drawing at right.

When building either size drawer, the basic approach is the same. There are only two differences — the lengths of the fronts and backs, and the number of dividers, see drawing at right.

FRONTS, BACKS, & SIDES. To begin, cut the **fronts, backs,** and **sides** to size.

Now cut a rabbet on the front and back pieces for the sides, see Fig. 9. Then cut a groove on the inside face of each workpiece for the bottom, see Fig. 10.

Next, dadoes for drawer dividers can be cut. For the larger drawers, the dadoes are cut in the fronts and the backs. On the smaller drawers, they're cut in the sides, see exploded view at right.

Now dry assemble each drawer to determine the size of the bottom and dividers (or divider). Then after they're cut to size, glue and nail the drawers together. Finally, I added drawer pulls that have a slot for a label (for sources, see page 31).

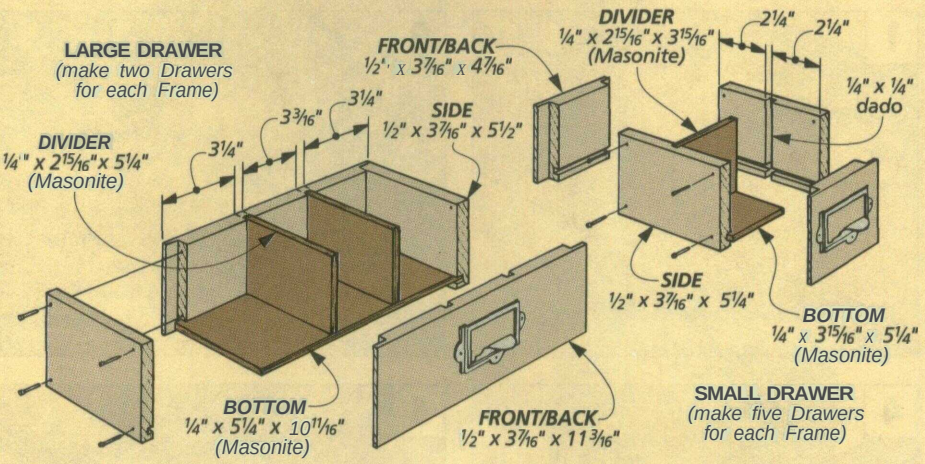

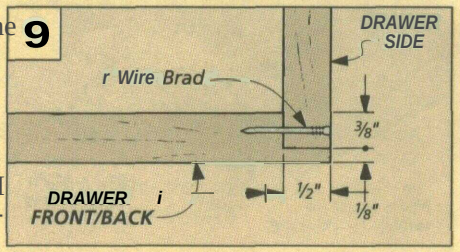

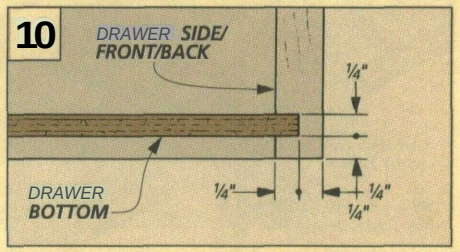

SHELF

When designing this Wall Storage System, I thought it would be a good idea to have a shelf for holding small items like bottles of glue and containers of wood filler. (Items like these tend to get lost in the shop. So a shelf on the pegboard was just the answer for keeping them handy.)

The simplest shelf to build would have been a board with two mounting hooks screwed in the back. But to add more support to the shelf, I screwed a back piece to the bottom, see drawing at right

Once I had the back in place, I realized it could be used for more than support. What I did was screw several L-hooks in the back near the bottom and used them for hanging hand tools, see Figs. 11 and 12.

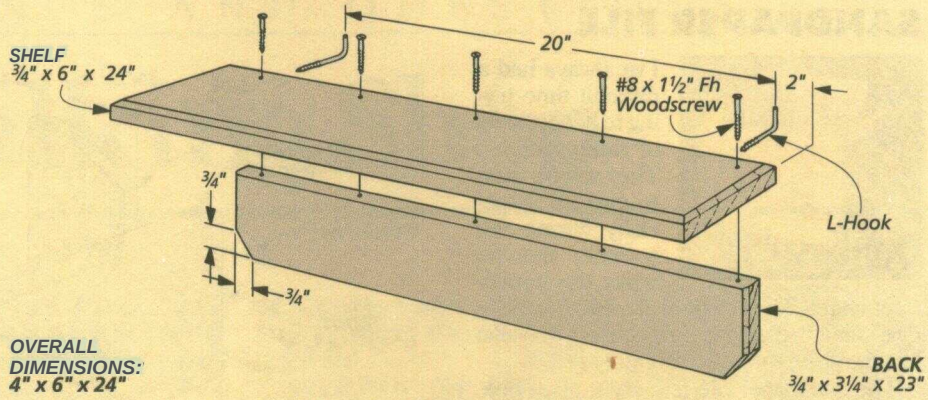

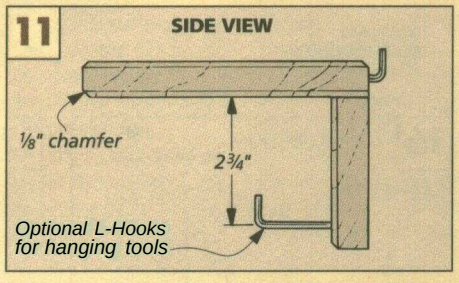

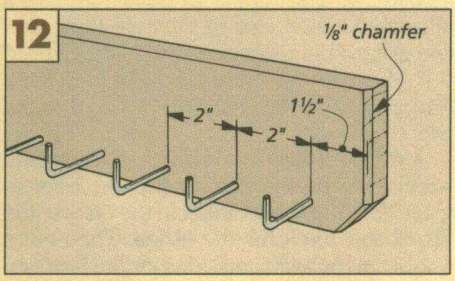

SANDPAPER DISPENSER

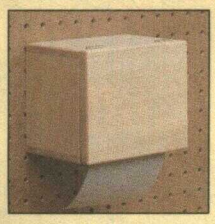

One thing we use a lot of in the *Woodsmith* shop is Stikit (adhesive-backed) sandpaper. When I realized that we go through about as many rolls of it as we do toilet paper, it gave me an idea for a Stikit dispenser — using a toilet paper holder.

Each dispenser is built with ½"-thick stock for the **sides** and **door.** But ¾"-thick stock is used for the **top.** This allowed me to screw in the L-hooks without worrying about splitting the top, see drawing at right. And because the top and bottom have the same size rabbets, it was easiest to use ¾"-thick stock for the **bottom** as well.

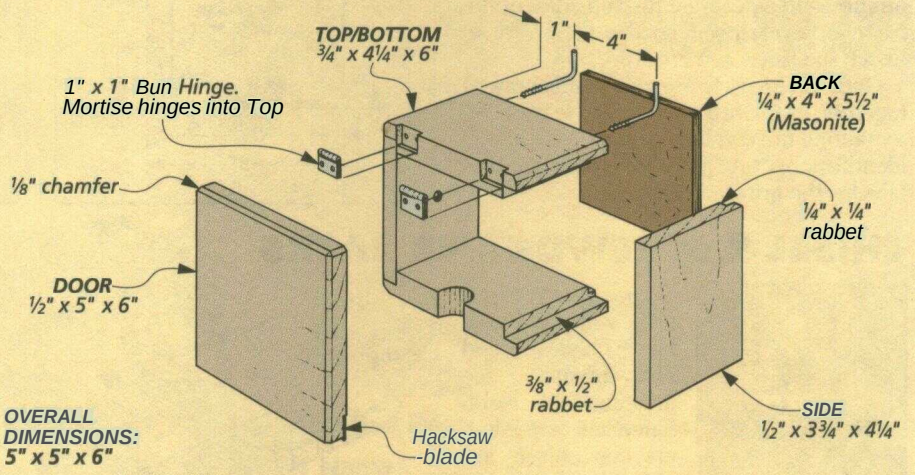

Before the parts can be assembled, a number of things have to be done. First, cut mortises in the top for hinges, see drawing. (I used a chisel for this.)

Then drill a finger hole (actually a partial hole) in the bottom, see Fig. 13. This hole allows you to get a finger behind the sandpaper when tearing off a piece.

Next, cut a recess in the bottom edge of the door for a short length of a hacksaw blade to act as a paper "cutter," see Fig. 14. Then drill a hole in each side for the toilet paper holder, see Fig. 15.

After the holes are drilled, the dispenser can be glued and nailed together.

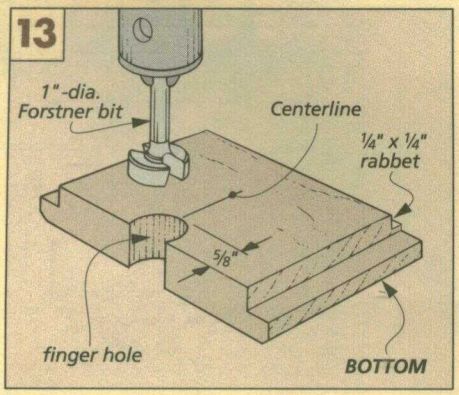

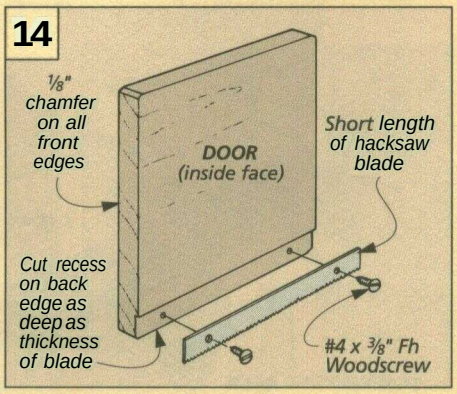

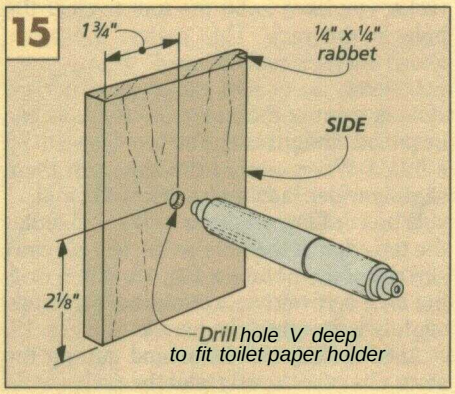

SANDPAPER FILE

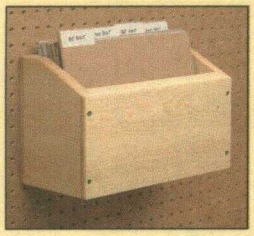

I've always had a difficult time trying to keep sheets of sandpaper flat. They always want to curl up. Especially during the summer months when the humidity changes. To keep them flat and relatively dry, I made a sandpaper file system that also lets me store them according to grit.

The sandpaper file is just an open box. Loose dividers, similar to those found in a file cabinet, are used to separate the different grits of sandpaper, refer to Fig. 17. I used ¼" Masonite for the dividers to help keep the sandpaper flat (and the air out) when stored on edge.

ANGLED SIDES. The sandpaper file is built similar to the the drawer frames, refer to page 22. First, cut a rabbet in the ends of the **front** and **back** for the **sides.** Then cut a rabbet in the front and sides for the **bottom.**

To make it easier to get the sandpaper in and out of the file, I cut the sides at an angle on the band saw. Then the top edge of the front is bevel-ripped on the table saw to match the sides, see Fig. 16.

Once all the parts are glued and screwed together, install two L-hooks in the back. After cutting the dividers to shape with a little identification "tab" like a file folder, label the tabs for the grits you use.

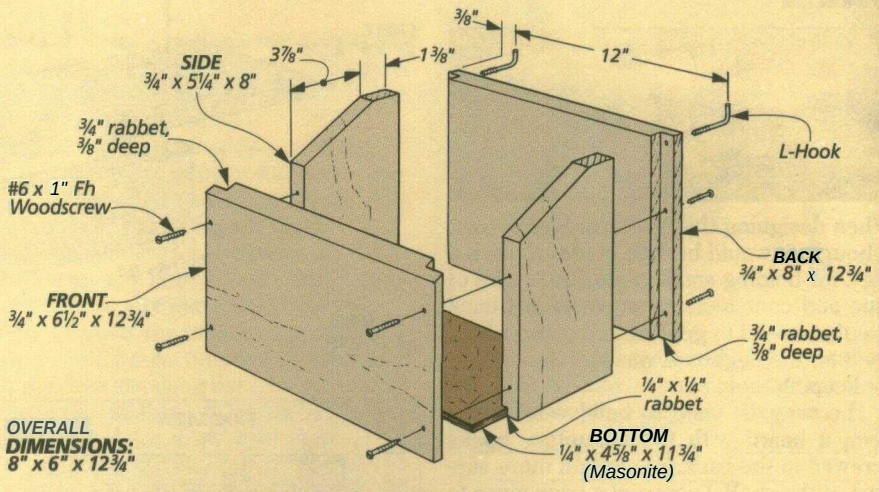

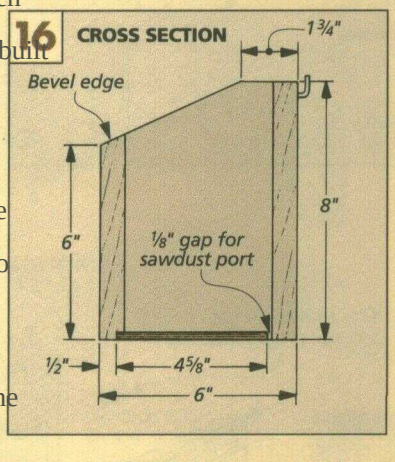

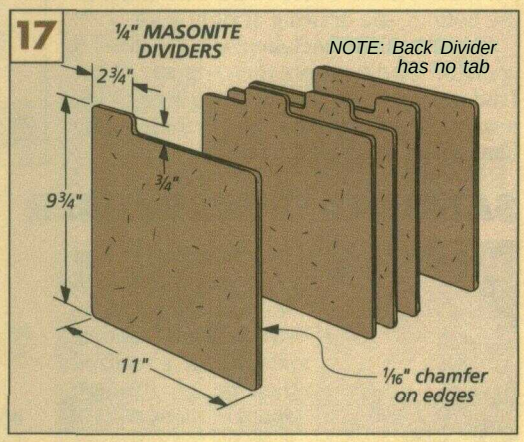

CHISEL & SCREWDRIVER RACKS

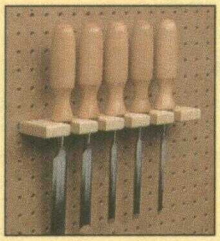

No pegboard is complete without a rack for chisels and screwdrivers, see drawings at right. Since all screwdrivers and chisels are not alike, I customized the racks shown here for my tools. So when you're making racks for your hand tools, use the ideas shown here to customize your own.

SPACE CONSIDERATIONS. With many tool racks, you have to lift the tool to clear the hole in the rack. This means the space above the rack can't be used.

Instead, these tool racks have narrow slots in front of the holes, so the tools can be pulled straight out (You'll still have to lift a little.) When cutting the slots, cut them slightly wider than the shank of the tool.

When drilling a hole for a chisel, chamfer the top edge of the hole so the ferrule can't slip out of the hole, see Fig. 18. When drilling for a screwdriver, counterbore the hole slightly larger than the handle, see Fig. 19.

After drilling the holes and cutting the slots, chamfer the edges of the rack. ❑

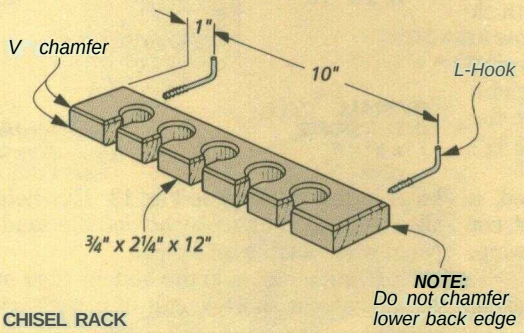

CHISEL RACK

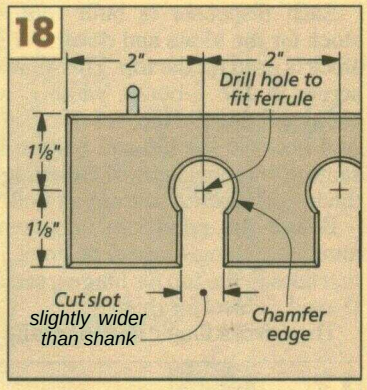

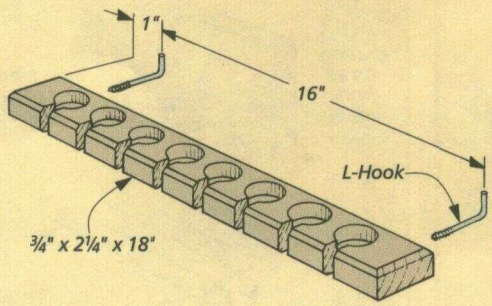

SCREWDRIVER RACK

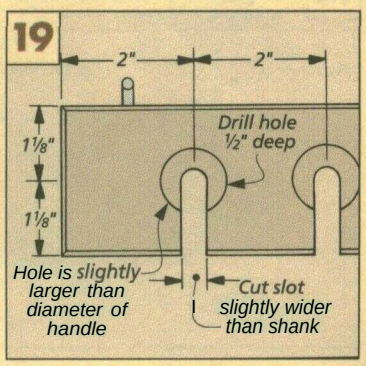

Talking Shop

TOUCHING-UP ROUTER BITS

• *I use my router a lot, and I've noticed that some of my bits are becoming dull. Is there anything I can do short of sending them to a sharpening service or buying new ones?*

Gary Harper
Hialeah, Florida

Think of your router bits as part of your shop "wardrobe." Just like a sport coat or a sweater, an expensive bit may need to be "sent to the cleaners" occasionally. But there are a couple things you can do at home to keep bits clean and sharp.

SPOT CLEANING. The first thing I do to a dull router bit is clean it. Denatured alcohol and an old toothbrush work best. Gust don't soak the bearings.)

HONING FILE. The next thing I do is lightly touch up the cutting edges. For this I use a set of diamond honing files, see photo and Sources on page 31.

SAFETY NOTE. "Touching up" the edges of a router bit is *not* the same as sharpening it. It's more like brushing your sport coat with a lint remover.

Note: Don't try to sharpen the beveled edge of the cutters. Not only will this change the cutting profile, it can also affect the balance of the bit, which can be dangerous. Instead, I only touch up the *flat* surface (the front) of the cutters with the honing files.

TOUCH-UP. Usually, it takes just a couple strops over a medium-grit diamond file, followed by a couple passes over a fine-grit diamond file.

PROCEDURE. To do this, I clamp the file to the edge of my bench. This way, I only have to worry about controlling the router bit

Then, I use my thumb to keep the flat surface of the carbide cutter perfectly flat on the honing file. After a couple passes on one of the cutters, I do the same for the other cutter on the bit.

Shop Note: To keep the bit "balanced," (both cutters taking an equal bite when routing) try to maintain the same amount of pressure on each cutter when filing. And make the same number of strokes across the file.

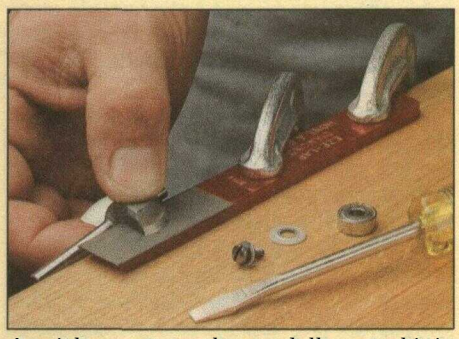

A quick way to touch up a dull router bit is to use a diamond honing file. For a bit with a pilot bearing, first I remove the bearing.

OPEN OR CLOSED ANGLE FOR MITERS?

• Last issue, we showed how to set a miter gauge to cut accurate 45° miters. But in putting that article together, there was a little debate in our shop. Should the miter gauge face *towards* the blade (a closed angle), see Fig. 1? Or *away* from the blade (an open angle), see Fig. 2?

SAFETY. One big concern is safety. When the miter gauge faces the blade, so do my fingers (which makes me a bit uneasy).

But those who like the closed angle assured me this is mostly psychological. They still have all their fingers because they're never in the path of the blade.

CUTOFF PIECE. This group brought up a safety issue of its own. If an auxiliary fence extends across the blade, the open angle would trap the waste piece between the fence and the blade. The closed angle lets the waste fall away safely.

But there is an easy solution here. Just trim the end of the fence, see Fig. 2. It will still support the back edge of the piece but won't trap the waste.

CHIPOUT. Surprisingly, both groups thought their method produced less chipout. So I did a little test in the shop.

There wasn't much difference between the two. With a dull blade and no auxiliary fence to support the back edge of the piece, I did get some chipout with the open angle. But a sharp blade and a fence eliminated it

STOP BLOCK. Another difference comes when using an angled stop block to cut the second miter on a workpiece. Again, there's no clear winner.

With the closed angle, the stop block holds the workpiece against the fence. But the force of the blade can pull the piece along the fence — away from the block. To avoid this, just attach sandpaper to the fence.

In the open angle, the force of the blade pushes the piece into the stop block. But the block doesn't hold the piece as well.

MY OPINION. To cut molding, I generally use the closed angle to reduce chipout. Molding usually has beads or roundovers, and the back edges of these curves can chip out because there's nothing to support them.

Otherwise, I almost always use the open angle. It's a habit I feel safe with. And I'm reluctant to change habits — unless there's a good reason.

But a good argument can be made for turning the miter gauge either way. And don't change a habit you've become comfortable with.

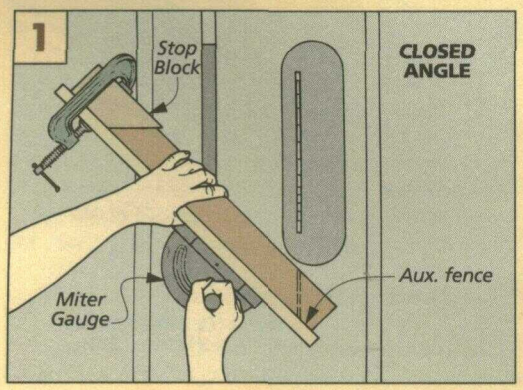

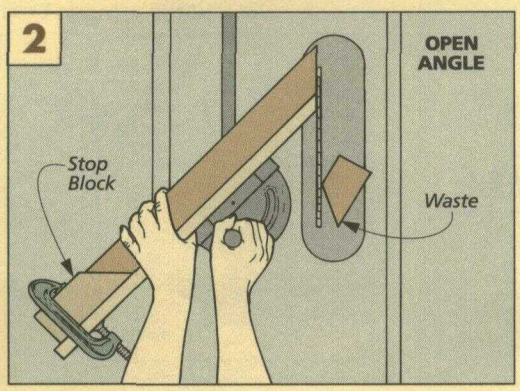

Spice Drawer

After rummaging through my kitchen cupboard looking for some chili powder, I decided there had to be a better way to store spices. A way that kept them from getting lost in the cupboard or from taking up valuable counter space.

So after some trial and error, I designed this Spice Drawer that mounts up and out of the way under the kitchen cabinets and off the top of the counters. (It's like one of those "space-saver" appliances.)

It looks like a drawer but doesn't act like one. Instead of just pulling straight out, this drawer swings down as you open it. That way, spices are easy to reach when they're needed, but out of the way when they're not.

Another nice thing about this project is there isn't any expensive hardware needed to build it. The false front replaces a drawer pull. And all the movement of the drawer takes place on a pair of pivot pins made from dowels. The pins guide the drawer along grooves as it slides out, and they substitute for hinges when it swings down.

To keep the drawer from pulling out too far, a small plug is glued in each case side as a drawer stop. These stops also allow the drawer to rest at an angle when it's opened all the way. That makes getting at your spices a whole lot easier.

MATERIALS

A	Case Sides (2)	3/4 x 3 3/4 - 11 1/2
B	Case Top (1)	3/4 ply - 12 x 17 rgh.
C	Trim Strip (1)	3/4 x 1/2 - 17 rgh.
D	Stretchers (2)*	3/8 - 15 7/16
E	Drawer Sides (2)	1/2 x 2 7/16 - 11 1/2
F	Drawer Fr/Bk (2)	1/2 x 2 7/16 - 13 15/16
G	Drawer Btm (1)	% ply- 10 15/16 - 13 15/16
H	Dividers (3)	1/4 x 2 rgh. 13 11/16
I	False Front (1)	1/2 x 3 11/16 - 16

SUPPLIES

- (2) 1/4 x 1/4 x 3/4 Plugs
- (2) 1/4 x 1 Pivot Pins*
- (2) #6 x 3/4 Fh Woodscrews

*Cut from Oak Dowels

CUTTING DIAGRAM

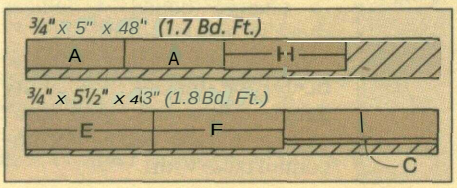

EXPLODED VIEW

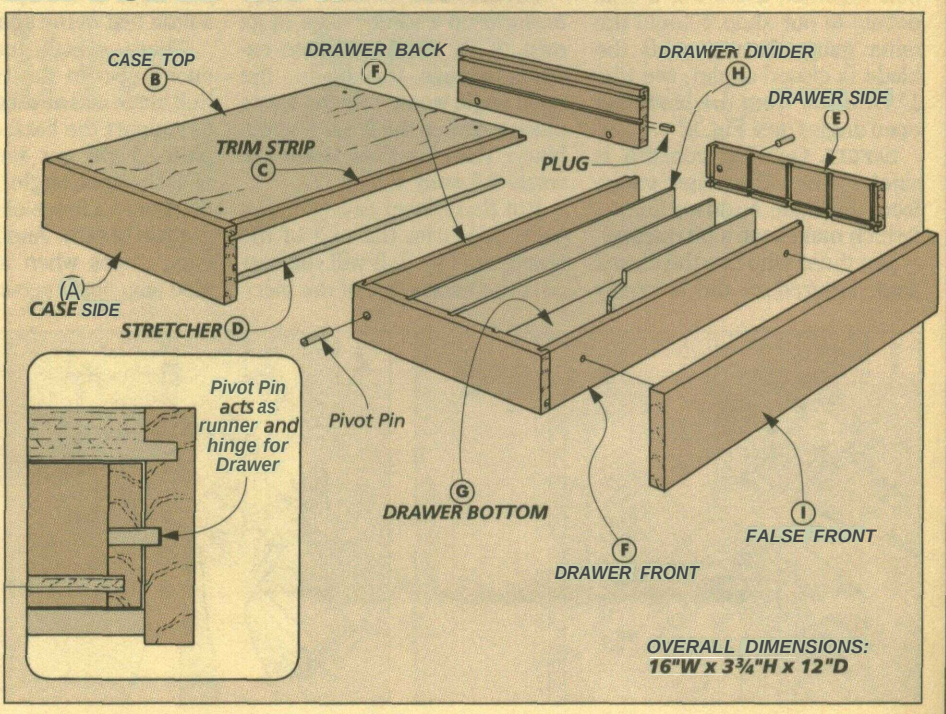

CASE

To build this Spice Drawer, I worked from the outside in. So I began by constructing the case that holds the drawer.

SIDES. To build the case, first cut two case sides (A), to finished length and width, see Fig. 1.

Design Note: When closed, the front of this Spice Drawer should fit flush with the the doors (or face frame) of your kitchen cabinets, refer to Fig. 17. My cabinets measured 12" from the front of the face frame to the wall. If your cabinets are smaller, then shorten the sides of your Spice Drawer.

GROOVES. Next, cut ½"-deep groove in each side blank to hold the top of the case, see Fig. 1 and Fig. 6.

Then cut ¼"-deep grooves to guide the pivot pins, see Figs. 1 and la.

STRETCHER HOLES. Two stretchers made from dowels connect the sides, refer to Fig. 6. Why dowels instead of a solid bottom? With a solid bottom it would be impossible to install your screws when mounting the case under your kitchen cabinets.

To make sure the holes for the stretchers were aligned properly, I marked both hole locations at the same time, see Fig. 2. Then I drilled the holes using a fence to maintain the alignment, see Fig. 3.

TOP. With the sides complete, the next step is to make the case top (B). I cut the top oversize and then glued a trim strip (C) to the front edge, see Fig. 4.

After the glue dries, cut the top to finished size, see Fig. 5. (When ripping the top to finished depth, cut off the back edge.)

Then cut a ½" rabbet across each end, see Figs. 5 and 5a. This creates a tongue that fits into the top groove on the case side (A). Sneak up on the depth of the rabbet until the tongue fits snug in the groove.

To mount the case under the cabinets, I drilled four countersunk shank holes, see Fig. 5. These could be drilled later. But it's easier to drill them before the assembled Spice Drawer is ready to be installed.

DOWELS. With the top complete, next cut two stretchers (D) from a ⅜" dowel, see Fig. 6. The length of the dowels should be a hair less than the length of the top (B). That way the case can be glued up square without any interference from the dowels.

CASE ASSEMBLY. Before gluing the case together, I dry assembled the pieces to check that everything fit, see Fig. 7. Then, to keep the case sides square to the top when clamping, I cut a temporary spacer from a piece of scrap lumber.

After the case has been glued together, cut and glue two small plugs into the grooves (near the front) for drawer stops, see Fig. 7. Position the plugs to fit flush with the front of the case.

Safety Note: Cut the small plugs from a long piece of ¼"-square stock.

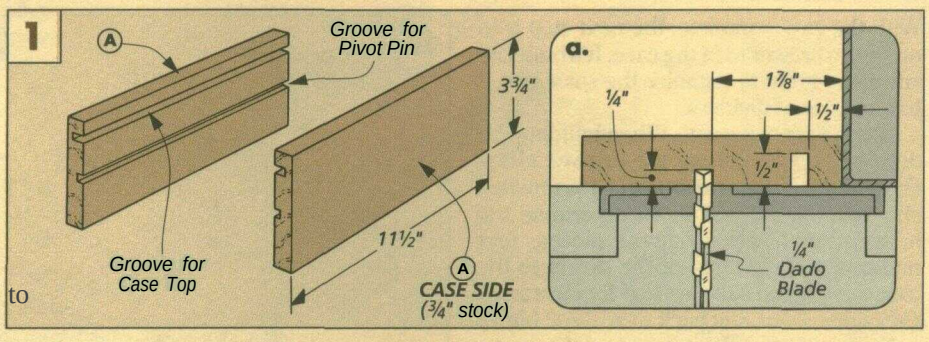

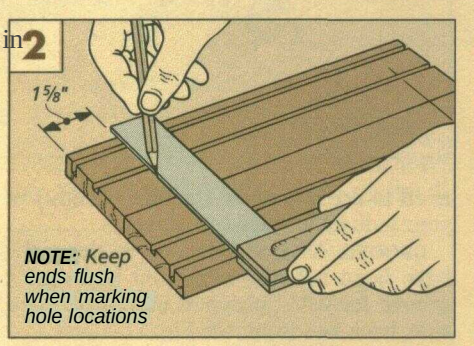

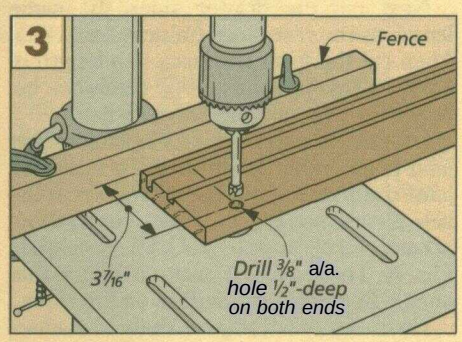

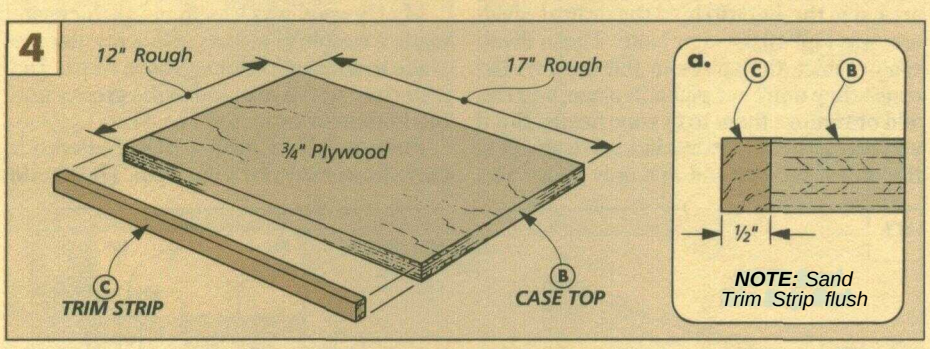

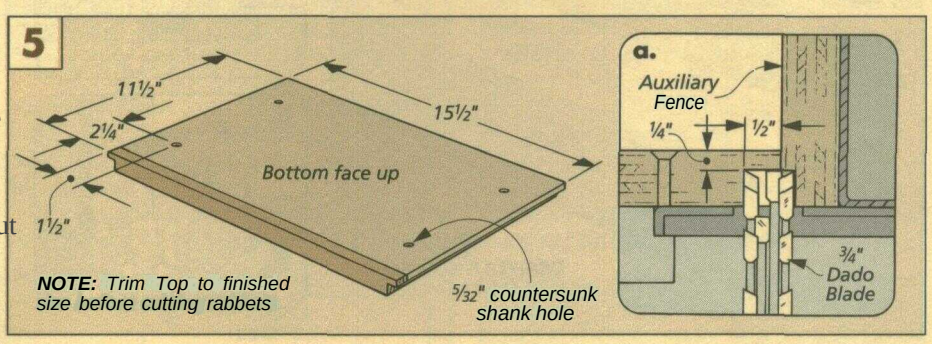

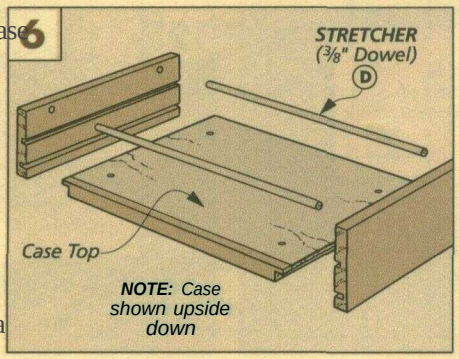

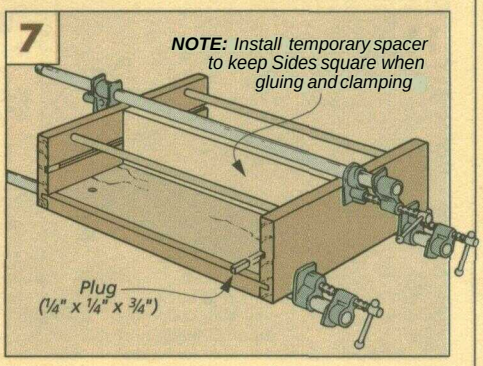

DRAWER

With the case complete, the next step is to make the drawer to fit the case. It's built like any drawer, but to organize the spice jars, it has a series of dividers.

SIDES, FRONT & BACK. When building the drawer, start by cutting the **drawer sides** (E) and the **front and back (F)** to finished size, see Figs. 8 and 9. To determine the height and length of these pieces, first measure from the top of the dowel to the case top (B) and subtract 1/16" for clearance. (My sides, front, and back were 2 7/16" high.)

Next cut the drawer sides the same length as the case sides (mine were 11 1/2"). Then cut the front and back to a length of 13 15/16". This provides a 1/16" clearance between the case and the drawer sides.

LOCKING RABBET. use a locking rabbet joint to assemble the drawer. To make the joint, the first step is to cut dadoes across the side pieces, see Fig. 9a. Then, cut a rabbet at each end of the front and back pieces, see Fig. 9b. These rabbets create a tongue that should fit snug in the dadoes on the sides.

DIVIDERS. Next, three shallow dadoes are cut in the sides to hold the drawer dividers, see Fig. 10. Design Note: These dividers organize the spices in the drawer. Because they don't get glued in place, you can add or remove them to fit your needs. But if you don't want the extra dadoes to show on the sides, lay out and cut only those you need to accommodate the size (height) of your individual spice containers.

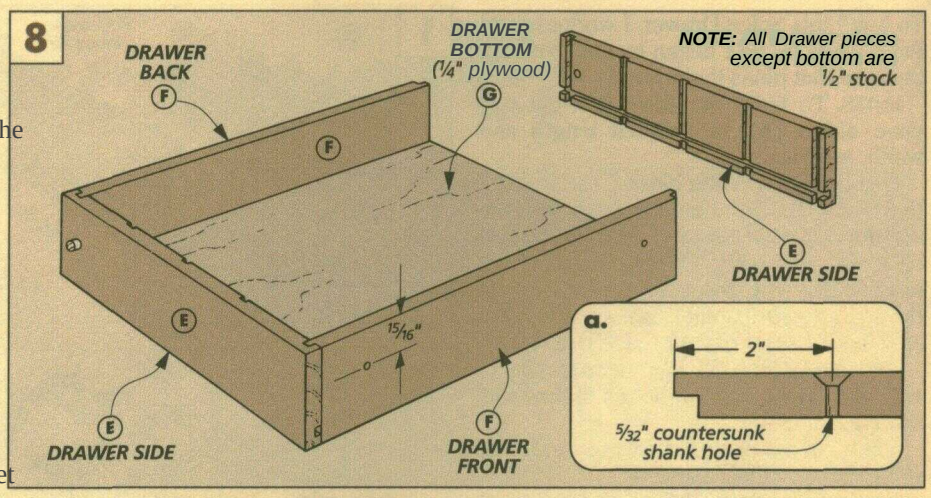

GROOVE. After the dadoes in the sides have been cut, the next step is to cut a groove for a 1/4" plywood bottom in each side, back and front, see Fig. 11.

My plywood was less than 1/4" thick, so I made a couple of passes with a regular saw blade to sneak up on the groove width. I adjusted my rip fence to widen the groove until the bottom fit snug, see Fig. 11a.

PIN HOLE. Now, drill a hole centered in each drawer side for a pivot pin. The pins located in both sides need to be aligned with each other so that the drawer will slide open and closed without binding.

An accurate way to keep the pin holes on each side aligned is to drill both holes at the same time, see Fig. 12. Use carpet tape between the sides to keep them from shifting when drilling the holes.

SHANK HOLES. Finally, two countersunk shank holes are drilled on the inside of the drawer front, refer to Fig. 8a. These holes will be used later for attaching a false front (I) to the drawer.

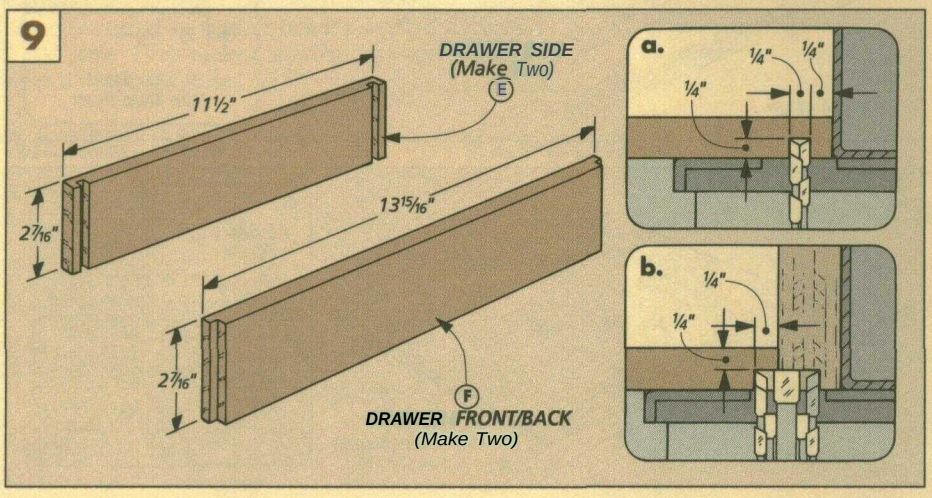

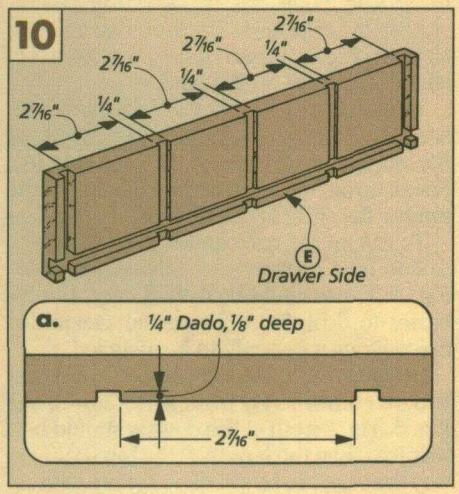

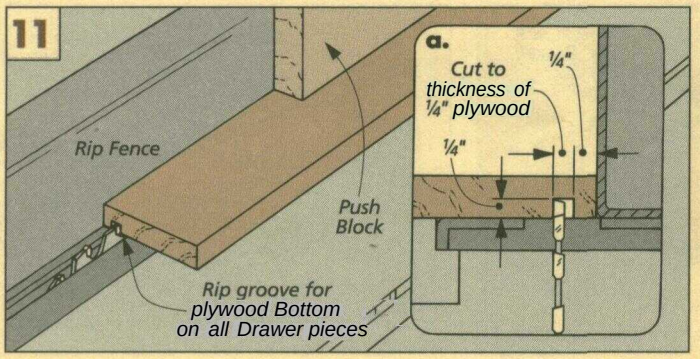

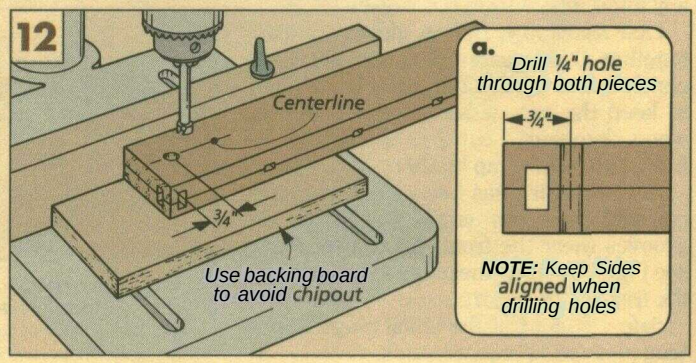

DRY ASSEMBLY. Before the drawer can be glued together, the plywood bottom (G) must be cut to its finished size. To do this, first dry assemble the drawer pieces. Now measure between the sides and front and back. Next, add 7/16" (for the bottom grooves) to these dimensions. Then cut the plywood bottom to this size.

Finally, glue and assemble the drawer, refer to Fig. 8.

CLEARANCE BEVEL. After the glue has dried, cut a 45° bevel along the top back edge of the drawer, see Fig. 13. This bevel allows the drawer to drop down when ifs pulled out of the case.

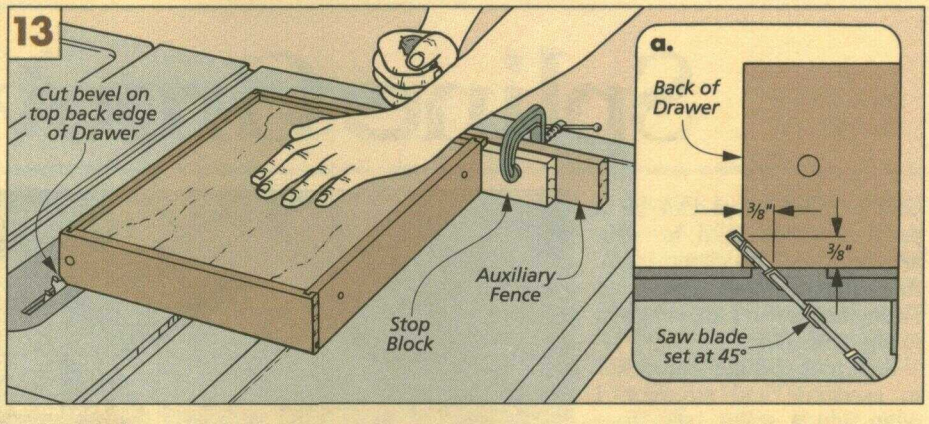

PIVOT PINS. To hold the drawer in the grooves and still allow it to pivot open, a pair of pivot pins are glued in the sides (E), see Fig. 14. Start with extra-long pins (in my case, 1" long) and then use a hand saw to trim them to length until the drawer slides smoothly in the grooves, see Fig. 14a.

DRAWER DIVIDERS. The next step is to make the drawer dividers (H). To do this, I resawed and then planed a 3/4"-thick board into two 1/4"-thick boards. Next, rip the dividers so that their finished height fits flush with the top edge of the sides. Then cut them to length for a snug fit between the dadoes in the drawer sides, see Fig. 15. Note: My dividers measured 13 11/16" long.

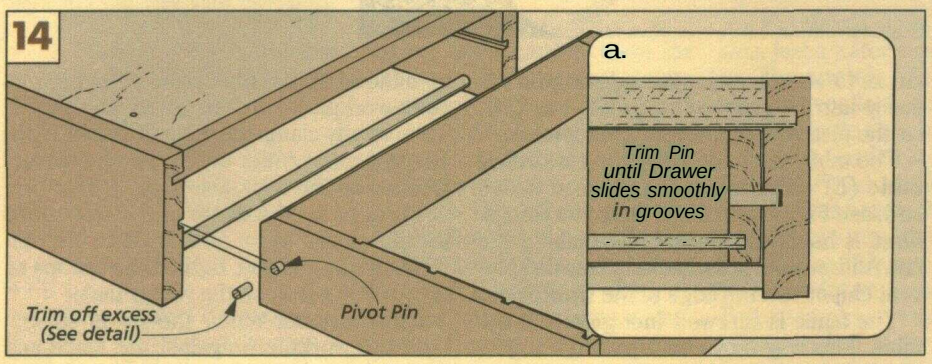

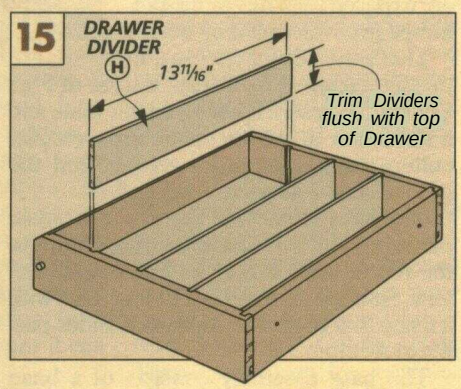

FALSE FRONT & INSTALLATION

The last step on the drawer itself is to attach a false front (I) to the front of the drawer. To do this, first cut the false front to length so it covers the sides of the case, see Fig. 16. (Mine was 16" long.)

Next, break the front edge with a 1/16" chamfer (or choose a decorative profile that will match your kitchen cabinets).

Then position the false front (I) on the drawer assembly to leave a 1/16" clearance gap at the top of the drawer, see Fig. 16a. I used double-sided carpet tape to hold it in place while I marked the holes, see Fig. 16.

Now mark the location and drill pilot holes in the false front. Then attach the false front to the drawer assembly, see Fig. 16a. Note: Remove the tape before attaching the false front to the drawer.

INSTALLATION. Finally, mount the Spice Drawer to your kitchen cabinets. If the face frames of your cabinets extend below the bottom of the cabinet, you will need to add a couple of spacers to bring the Spice Drawer flush with the frame, see Fig. 17. Then position the dividers in the dadoes to fit your spice containers.

Choose a finish that matches the color of your kitchen cabinets. I used Minwax's Golden Oak stain and topped it with two coats of Minwax's Antique Oil. ❑

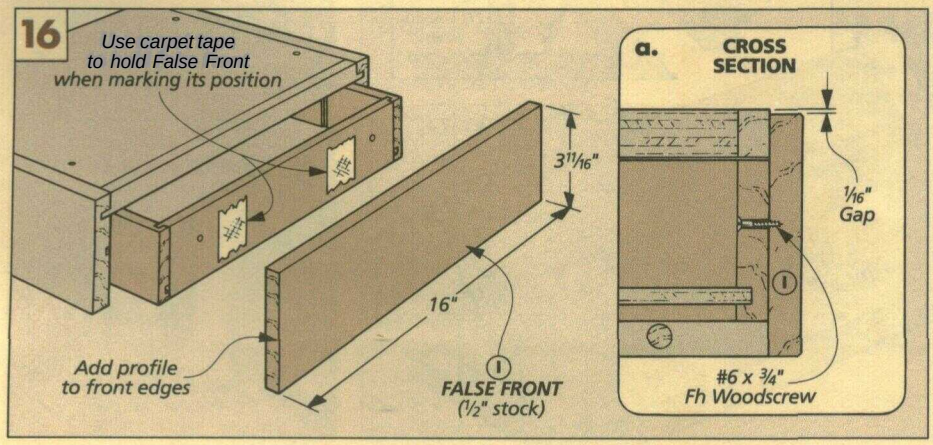

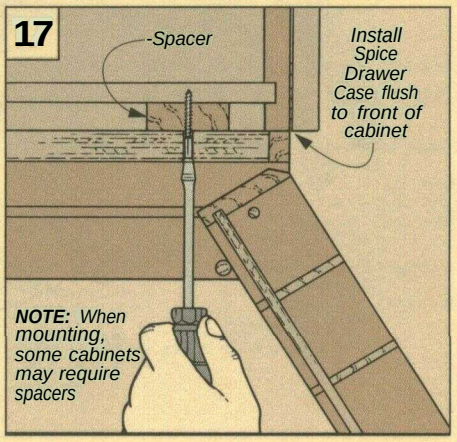

Spline Groove Jig

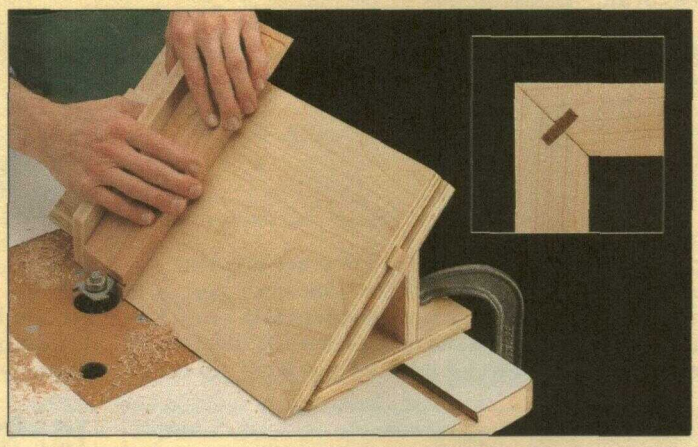

Gluing miter joints can be a problem. They tend to slide around when you clamp them. And a miter joint isn't really that strong because it's an end grain to end grain joint

So to make a miter joint easier to assemble and stronger, I often add a spline, see inset photo. Usually I'll cut the grooves (kerfs) for the spline with a table saw. But in some situations (when working with thin stock or when the splines are exposed), narrow or flat-bottomed grooves would be better.

That's the advantage I saw in this jig designed by **Gregg Eaton,** of Fort Collins, Colorado. It uses a router table and a slot cutter to cut the spline grooves. Slot cutters cut a flat-bottom groove, and the groove can be as narrow as 1/16".

CONSTRUCTION. This jig has two main parts, see Fig. 1. A base assembly clamps to the router table and looks like a small lectern. Sitting on top of it is a sliding table with a fence that holds the stock as it slides past the slot cutter.

The base assembly consists of a **base plate (A) and brace (B)** that hold a **platform (C)** at a 45° angle, see Fig. 1. (Shop Note: The angles on the base assembly are cut at 45° — otherwise the splines won't fit easily into the grooves.) A **guide bar (D),** on the platform, guides the sliding table.

The table assembly consists of a **sliding table (E)** with a **fence (F)** attached to one end, see Fig. 1. The fence does two things. First, it holds the stock while making the cut. And, second, it's a backing board to prevent chipout on the edge of the workpiece.

The fence is screwed (not glued) to the table. This way it can be replaced if it gets chewed up. (Safety Note: Keep the screws out of the path of the slot cutter.)

SET-UP. To set up the jig, first install a slot cutter in the router table and clamp a piece of mitered scrap (the same thickness as your workpiece) to the fence, see Fig. 2. Then lightly clamp the jig to the table. Now, adjust the slot cutter until it's in the correct location on the thickness of the miter.

Then, to set the depth of the slot, move the jig closer to or further from the bit. When it's in position, tighten the clamps so the jig won't shift on the router table.

USING THE JIG. When the jig is set up, hold the workpiece against the fence and feed it through the cutter, see photo.

One other thought To make splined miters stronger, cut the spline so the grain runs across the joint see Fig. 3. ❑

FEATURE YOUR JIG

If you've built an *original* jig and would like to see it featured on this page, send your idea to *Woodsmith*, Reader's Jig, 2200 Grand Avenue, Des Moines, IA 50312.

If we publish it, we'll send you $100 and a full set of *Woodsmith* back issues, with binders. (This set retails for over $300.) Include a sketch (or photo) and explain how it's used. And *please* include a daytime phone number

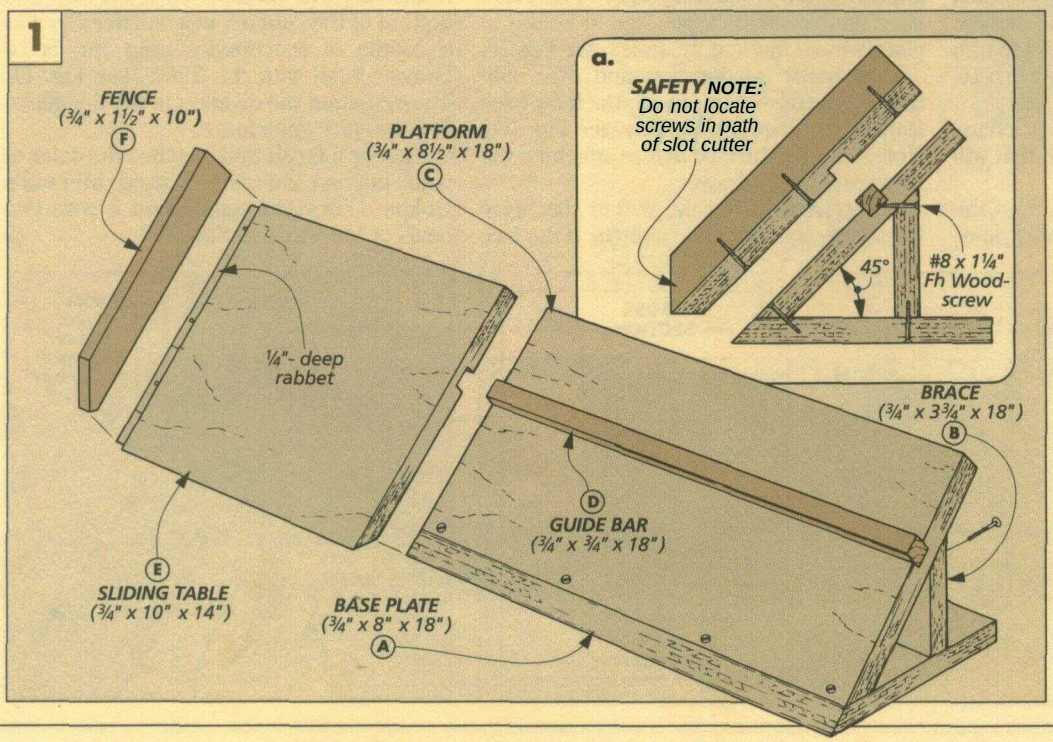

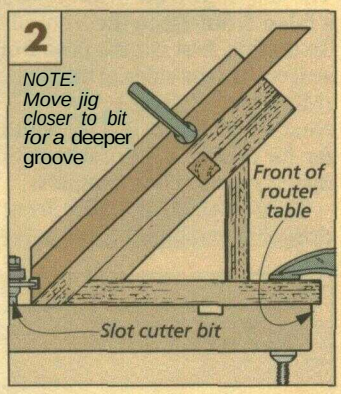

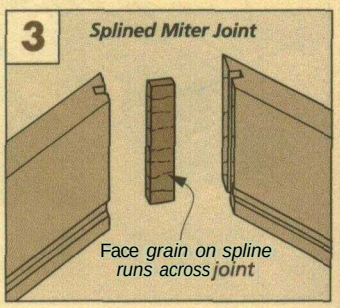

Sources

STORAGE SYSTEM

To build the Wall Storage System on page 20, I used a lot of hardware commonly available at local home centers. (In case you can't find the bin pulls, they're listed in the sources below.)

Here's a list of the hardware that each accessory requires. It includes everything shown in the photo on page 20. Note: The L-hooks are also called "square-bend screw hooks." Be sure they are 5/32"-dia. and 1¾"-long.

FRAME
- (16) #8 x 1¾" Fh Woodscrews
- (44) #12 x 1" Fh Woodscrews

5-DRAWER UNIT
- (3) L-hooks
- (5) Brass-Plated Bin Pulls
- (15) #2 x ¼" Rh Woodscrews
- (8) #6 x 1" Fh Woodscrews
- (40) 1" Wire Brads

2-DRAWER UNIT
- (3) L-hooks
- (2) Brass-Plated Bin Pulls
- (6) #2 x ¼" Rh Woodscrews
- (8) #6 x 1" Fh Woodscrews
- (16) 1" Wire Brads

SANDPAPER DISPENSER
- (2) L-hooks
- (1 pair) 1" x 1" Butt Hinges
- (1) 10" Hack Saw Blade
- (1) Toilet Paper Roll Holder
- (2) #4 x ⅜" Fh Woodscrews
- (12) 1" Wire Brads

24" SHELF UNIT
- (3) Lrhooks
- (5) #8 x 1½" Fh Woodscrews

SANDPAPER FILE
- (2) L-hooks
- (10) #6 x 1" Fh Woodscrews

TOOL RACKS
- (2) L-hooks

GARDEN BENCH

The Garden Bench shown on page 6 didn't require any hardware other than some screws and 4d finish nails. But for an outdoor project, you can't use just any type of screw — some will rust, creating dark stains.

What you need are screws that resist corrosion. For the Bench, I used galvanized deck screws. Deck screws have a heavier galvanized coating than galvanized woodscrews. And they've been hardened, so the heads on the long screws are less likely to twist off. Deck screws and finish nails are available at local home centers and hardware stores.

Diamond Honing Files: *To touch up the edges of router bits, we use diamond honing files, see page 25. For sources, see below.*

GLUES. This Bench also requires glue that can stand up to outdoor conditions. In the past, I've used a variety of glues on outdoor projects — epoxy, plastic resin, even some construction adhesive.

This time I tried something new (to me anyway). Instead of the mess of working with a two-part adhesive, I assembled the Bench with a ready-to-use glue, Franklin's Titebond II.

Titebond II is easy to use. It works like other yellow (PVA) glues. But unlike other yellow glues, it doesn't cure by evaporation alone. It *also* cures by a chemical reaction like two-part glues. This means the glue is water resistant when cured. (Which is not quite the same as waterproof. You can't leave it submerged in water.)

PAINTING SUPPLIES. Because I wanted to avoid having to refinish the Garden Bench often, I made sure it was well protected, see the article on page 15. To do this, I ended up with quite a few painting supplies. But they're all available at local paint stores. (I got most of mine at Sherwin Williams).

REPELLENT/PRESERVATIVE. I applied a coat of water repellent/preservative before painting the Bench. This is different than just a water repellent, such as Thompson's Water Seal. A simple repellent doesn't have any fungicide to fight mildew.

For the Garden Bench, I used General Finishes' Outdoor Oil, see sources below. But water repellent/preservatives, such as DAP's Woodlife, are available at local hardware or paint stores. Before buying a repellent/preservative, just make sure it can be painted when dry.

KILZ KNOT SEALER. When the repellent had dried completely, I sealed the knots with white, pigmented Kilz sealer, see page 19. Though it's available as a water-base (Kilz II), I used the original oil-base. (An oil-based paint primer won't adhere to the water-based Kilz, and the oil-base also dries quicker.) Kilz knot sealer can be found at local paint and hardware stores.

PRIMER & SPACKLING. When priming, either oil-based or alkyd primers penetrate the best and give better protection. When the primer had dried completely, I used interior/exterior spackling to fill the cracks and screw holes.

PAINT. Finally, use a latex paint for the top coat Because latex is more flexible than oil-based paint, it can expand and contract with the wood better.

Will the latex still expand when there's a harder oil-based primer? I wondered about this too and made some calls. I was told that latex will still be flexible as long as you put only one coat of oil-based primer underneath.

SPICE DRAWER

The Spice Drawer on page 26 doesn't require any special hardware. But it should be finished to match the cabinets in *your* kitchen. (I stained my Drawer with Minwax's Golden Oak. Then I wiped on two coats of Minwax's Antique Oil Finish.)

DIAMOND FILES

On page 25, we show how to touch up router bits with diamond honing files. Diamond files work on both carbide and high speed steel and can be found in a variety of grits, see photo above. These files (or similar ones) are available from the sources listed below.

MAIL ORDER SOURCES

Similar hardware and supplies may be found in the following catalogs. Please call each company for a catalog or information.

Woodcraft
800-225-1153
Titebond II, Bin Pulls, Diamond Honing Files

Trendlines
800-767-9999
Titebond II, Diamond Honing Files

Garrett Wade
800-221-2942
Diamond Honing Files

General Finishes
800-783-6050
Outdoor Oil

Highland Hardware
800-241-6748
Titebond II, Diamond Honing Files

Constantine's
800-223-8087
Titebond II, Bin Pulls, Diamond Honing Files

The Woodworkers' Store
800-279-4441
Titebond II, General Finishes Outdoor Oil, Bin Pulls, Diamond Honing Files

Woodworker's Supply
800-645-9292
Titebond II, Diamond Honing Files

Final Details

Garden Bench

This Bench is strong but light. Mortise and tenon joints provide the strength. And the design and finish create a "look" that's light. Plans start on page 6.

Spice Drawer

The original idea for this Drawer was to organize spice containers, see page 26. But we found it also holds a cookbook off the counter at a convenient angle.

Wall Storage System

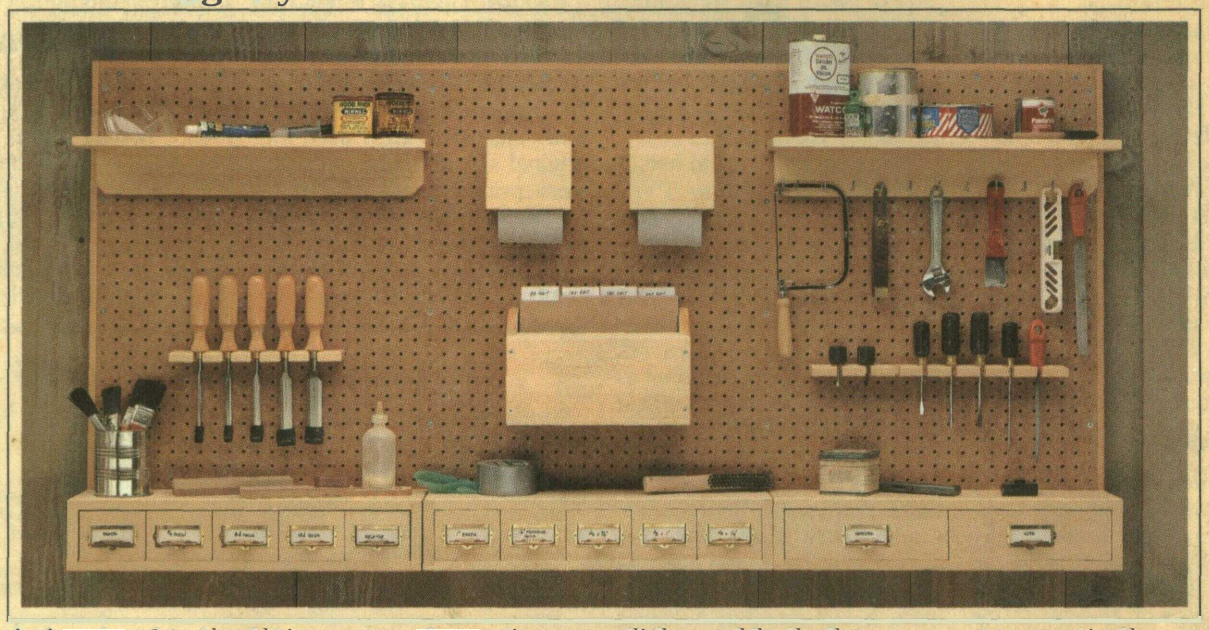

A pegboard tool rack is a common fixture in many shops. So beginning on page 20, we're showing our version of this versatile storage system. And instead of those little metal hooks that never seem to stay in place, we used another type of common hardware that works much better. Plus, we've added shelves and drawers.